Product Information: Crawler Excavator

R 930

Litronic®

Generation
8

Engine
180 kW / 245 HP
Stage V

Operating Weight
30,400 – 36,650 kg

Bucket Capacity
1.00 – 2.15 m^3

LIEBHERR

Experience the Progress
R 930

Safety
- Panoramic visibility with no obstructions and camera on the rear and the right side for enhanced safety
- Tiltable console for easy and safe access to cab
- ROPS-certified cab structure
- Emergency exit via the rear cab window
- Right window and windshield in laminated and tinted glass

Equipment
- Large choice of types and lengths of equipment
- Safety check valves for hoist and stick cylinders (option)
- Longer lifespan of components and higher productivity thanks to automatic centralised lubrication system

Maintenance
- Innovative servicing concept, with service points accessible from ground level
- Engine oil, hydraulic oil, fuel and urea (diesel exhaust fluid) levels visible on the display
- New concept for lateral access to uppercarriage and large maintenance platform

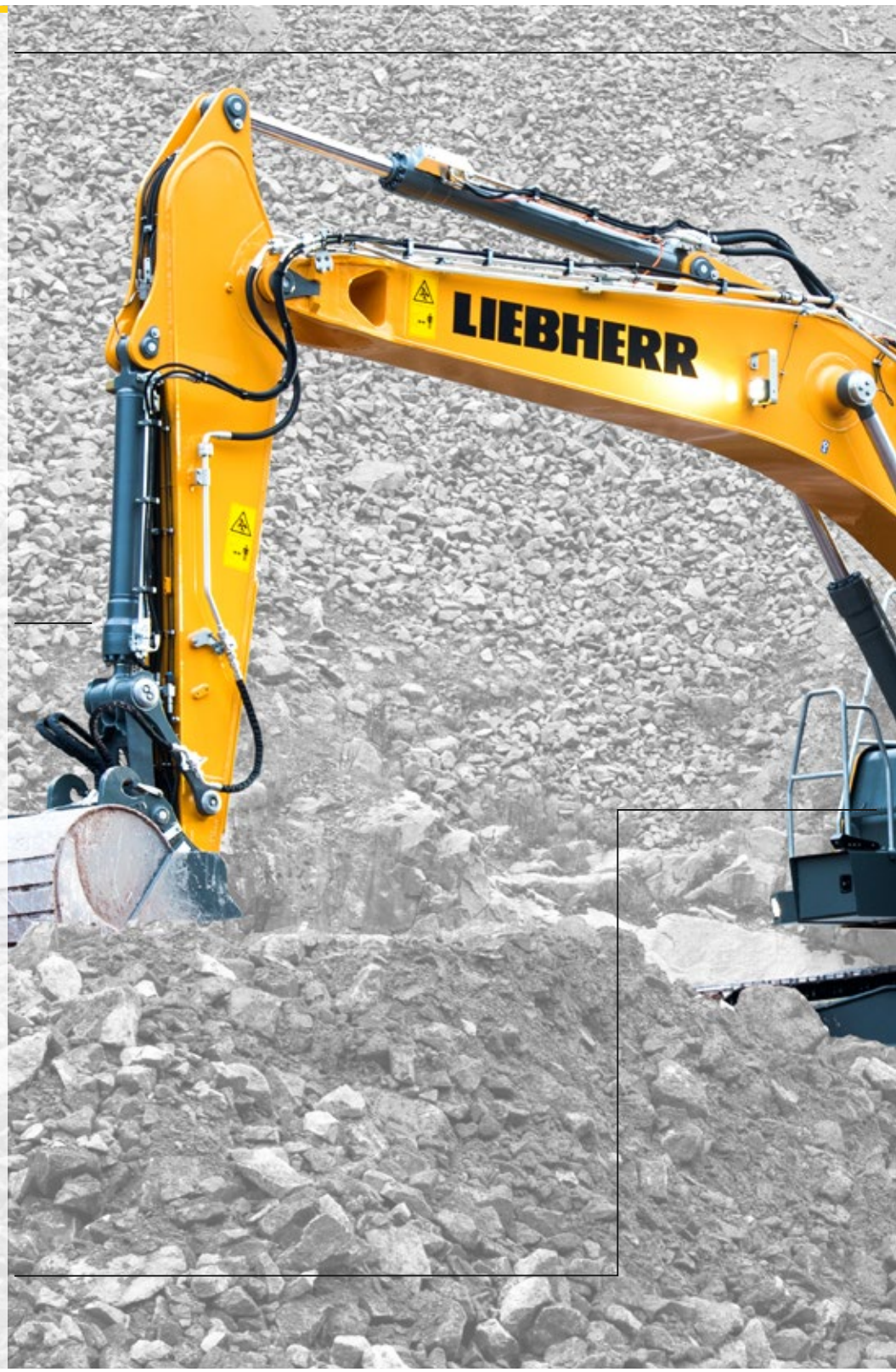

Comfort

- Spacious, air-conditioned work space
- Airsprung seat with vertical and longitudinal suspension
- Easy-to-use high resolution 7" colour touchscreen
- Completely retractable front cab window
- New LED lighting as standard

Engine

- New engine that conforms with the Stage V European exhaust emissions standard
- Automatic engine speed increase/decrease controlled by proximity sensors in the joysticks

Undercarriage

- Choice of 2 different robust x-shaped undercarriages and a variable track undercarriage with integrated eyes for secure transport
- Easy maintenance
- Maintenance-free track chains and track rollers with lifetime lubrication
- Extra storage (option)

Technical Data

Engine

Rating per ISO 9249	180 kW (245 HP) at 1,800 RPM
Torque	1,255 Nm at 1,350 RPM
Model	Liebherr D934 A7-25
Type	4 cylinder in-line
Bore	122 mm
Stroke	150 mm
Displacement	7.0 l
Engine operation	4-stroke diesel Common-Rail Turbo-charged and after-cooler
Exhaust gas treatment	Stage V DOC + DPF + SCR Passive regeneration by thermo management
Cooling system	Water-cooled and oil cooler, after-cooled and fuel cooled
Air cleaner	Dry-type air cleaner with pre-cleaner
Fuel tank	620 l
Urea tank	90 l
Electrical system	
Voltage	24 V
Batteries	2 x 135 Ah / 12 V
Alternator	Three-phase current 24 V / 140 A
Engine idling	Sensor controlled

Hydraulic Controls

Power distribution	Via control valves, simultaneous and independent actuation of undercarriage, swing drive and equipment
Electric servo circuit	Electro-hydraulic control
Equipment and swing	Proportional via joystick levers
Travel	– Proportional control via foot pedals or removable levers – Automatic or manual speed adjustment
Additional functions	Proportional regulation via foot pedals or mini-joystick

Hydraulic System

Hydraulic system	Positive Control hydraulic system. Demand-based, double independent pump flows Features high system dynamics and sensitivity provided by integrated system controlling Independent circuit for rotation
Hydraulic pumps	
For equipment and travel drive	Liebherr, variable displacement, swashplate double pump
Max. flow	2 x 265 l/min.
Max. pressure	380 bar
For swing drive	Swashplate pump, closed-loop circuit
Max. flow	200 l/min.
Max. pressure	400 bar
Pump management	Electronic management synchronous to the control block
Hydraulic tank	239 l
Hydraulic system	max. 475 l
Hydraulic oil filter	1 main return filter with integrated partial micro filtration (10 µm)
Cooling system	Compact cooler, consisting of a water cooler, with hydraulic oil cooler, gearbox oil cooler, fuel cooler and after-cooler cores and hydrostatically driven fan
MODE selection	Adjustment of engine and hydraulic performance via a mode pre-selector to match application, e.g. for especially economical and environmentally friendly operation or for maximum digging performance and heavy-duty jobs
Engine speed and performance setting	Stepless adjustment of engine output and hydraulic power via engine speed

Swing Drive

Drive	Liebherr swashplate motor with integrated brake valve and torque control
Transmission	Liebherr compact planetary reduction gears
Swing ring	Liebherr, sealed race ball bearing swing ring, internal teeth
Swing speed	0 – 10.1 RPM stepless
Swing torque	99 kNm
Holding brake	Wet multi-disc (spring applied, pressure released)

Operator's Cab

Cab	ROPS safety cab structure (roll-over protection system according to ISO 12117-2:2008) with windscreen, totally or partially retractable (only upper part), under cab roof, LED work headlights integrated in the ceiling, a door with a sliding window (can be opened on both sides), large storing box and several stowing possibilities, shock-absorbing suspension, laminated right hand side and roof windows, all windows tinted, separate extensible window shades for the sunroof window and windscreen, cigarette lighter and 24 V plug, 12 V plug, cup holder, mobile phone storage net
Operator's seat	Liebherr-Comfort seat, airsprung with automatic weight adjustment, vertical and longitudinal seat damping including consoles and joysticks. Seat and armrests adjustable separately and in combination (adjustable in width, height and inclination), seat heating as standard
Arm consoles	Oscillating consoles with seat, tiltable console left
Operation and displays	Large high-resolution operating unit, intuitive, colour display with touchscreen, video-compatible, numerous setting, control and monitoring options, e.g. air conditioning control, fuel consumption, machine and attachment parameters
Air-conditioning	Automatic air-conditioning, recirculated air function, fast de-icing and demisting at the press of a button, air vents can be operated via a menu. Recirculated air and fresh air filters can be easily replaced and are accessible from the outside. Heating-cooling unit, designed for extreme outside temperatures, sensors for solar radiation, inside and outside temperatures The air conditioning system contains fluorinated greenhouse gases
Refrigerant	R134a
Global warming potential	1,430
Quantity at 25 °C*	1,260 g
CO_2 equivalent	1.80 t
Vibration emission**	
Hand/arm vibrations	< 2.5 m/s², according with ISO 5349-1:2001
Whole-body vibrations	< 0.5 m/s²
Measuring inaccuracy	According with standard EN 12096:1997
Noise emission	
ISO 6396	L_{pA} (inside cab) = 71 dB(A)
2000/14/EC	L_{WA} (surround noise) = 104 dB(A)

Undercarriage

Versions	
NLC	Gauge 2,390 mm
LC	Gauge 2,590 mm
LC-V	Gauge 2,390 mm/2,890 mm
Drive	Liebherr swashplate motor with brake valves on both sides
Transmission	Liebherr planetary reduction gear
Maximum travel speed	NLC/LC: low range 3.5 km/h high range 5.8 km/h LC-V: low range 2.8 km/h high range 4.6 km/h
Drawbar pull on crawler	NLC/LC: 261 kN LC-V: 325 kN
Track components	D7, D7G, maintenance-free
Track rollers/ Carrier rollers	9/2
Tracks	Sealed and greased
Track pads	Triple grouser
Holding brake	Wet multi-disc (spring applied, pressure released)
Brake valves	Integrated into travel motor
Lashing eyes	Integrated

Equipment

Type	Combination of resistant steel plates and cast steel components
Hydraulic cylinders	Liebherr cylinders with seal and guidance systems
Bearings	Sealed, low maintenance
Lubrication	Liebherr central lubrication system
Hydraulic connections	Pipes and hoses equipped with SAE split-flange connections
Buckets	Standard equipped with Liebherr tooth system

* Valid for standard machine without operator's cab elevation and without height adjustable cab
** For the risk assessment according to 2002/44/EC see ISO/TR 25398:2006

Dimensions

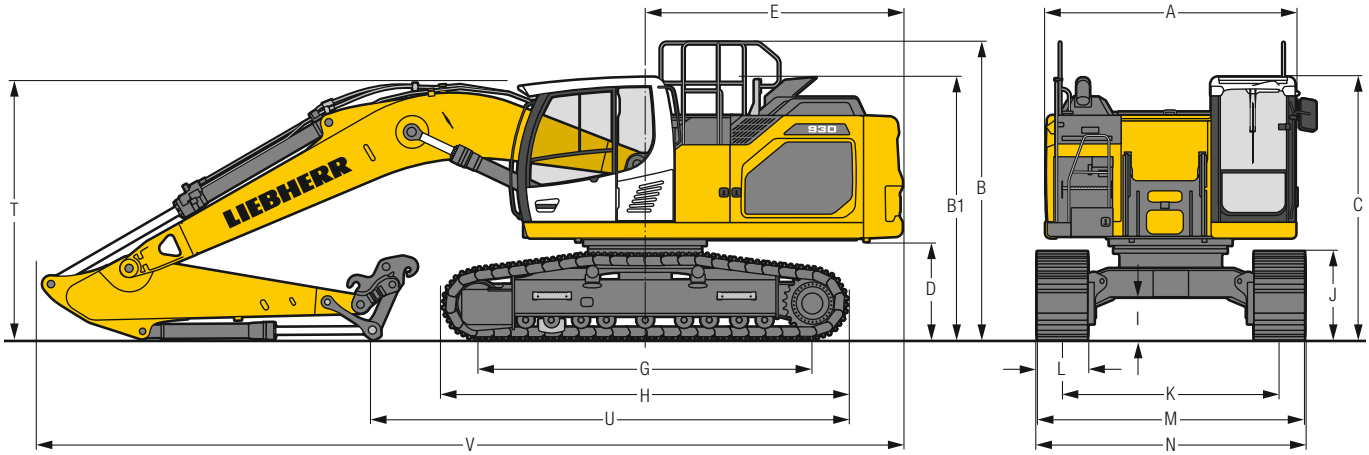

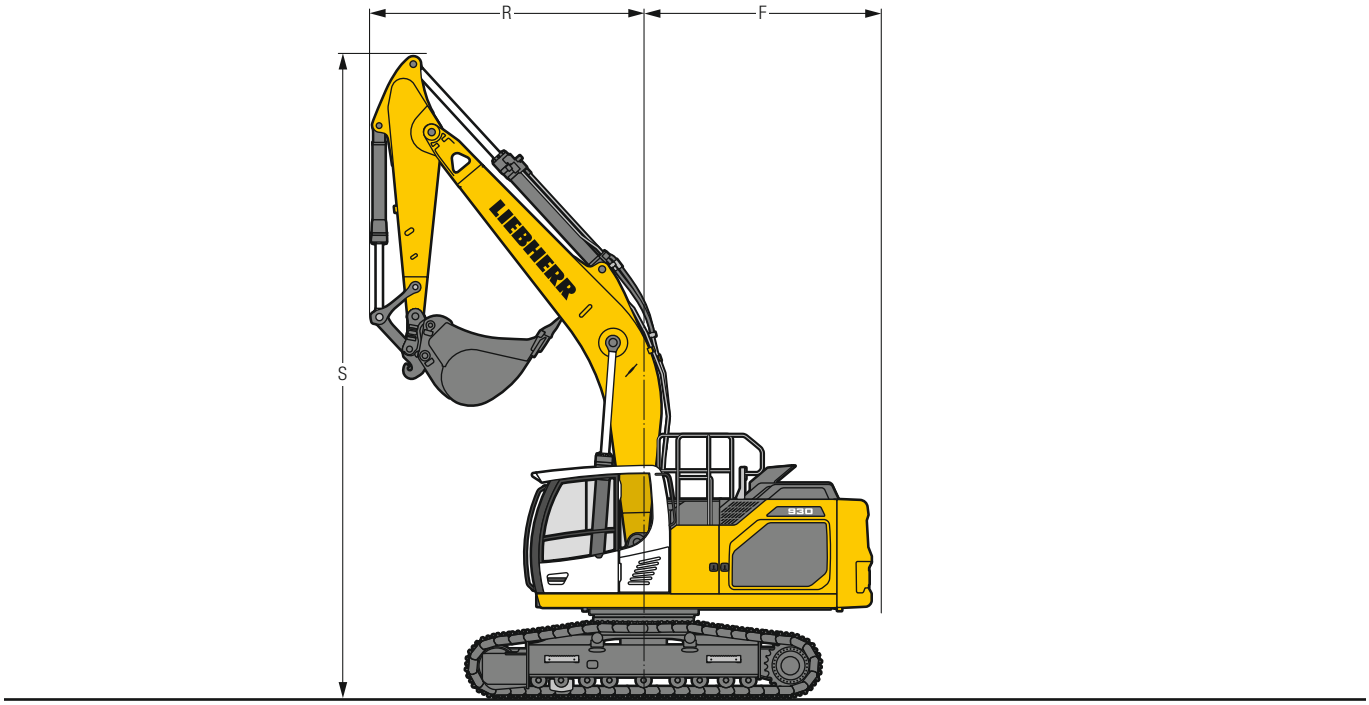

		NLC		mm	LC		mm	LC-V		mm
A	Uppercarriage width			2,990**			2,990**			2,990**
B	Uppercarriage height			3,130			3,130			3,265
B1	Uppercarriage height (handrails folded)			2,910			2,910			3,045
C	Cab height			3,150			3,150			3,285
D	Counterweight ground clearance			1,175			1,175			1,310
E	Rear-end length			3,075			3,075			3,075
F	Tail swing radius			3,200			3,200			3,200
G	Wheelbase			3,990			3,990			4,170
H	Undercarriage length			4,840			4,840			5,030
I	Undercarriage ground clearance			505			505			680
J	Track height			1,055			1,055			1,100
K	Track gauge			2,390			2,590			2,390/2,890
L	Track pad width	600	750	900	600	750	900	600	750	900
M	Width over tracks	2,990	3,140	3,290	3,190	3,340	3,490	2,990/3,490	3,140/3,640	3,290/3,790
N	Width over steps	2,990	3,190*	3,190*	3,190	3,390*	3,390*	3,170/3,670*	3,170/3,670*	3,320/3,820*

* width with removable steps

** without door stop device and spacer

		Stick length m	Mono boom 6.20 m with quick coupler			Mono boom straight 6.50 m with quick coupler			Two-piece boom 6.40 m with quick coupler		
			NLC	mm LC	LC-V	NLC	mm LC	LC-V	NLC	mm LC	LC-V
R	Front swing radius	2.50		3,700			3,250			2,600	
		2.80		3,700			3,250			2,700	
		3.20		3,700			3,250			2,800	
		3.70		3,700			3,200			2,850	
S	Height with boom up		8,700	8,700	8,850	9,300	9,300	9,450	9,450	9,450	9,600
T	Boom height	2.50	3,050	3,050	3,150	2,950	2,950	3,000	2,900	2,900	3,000
		2.80	3,100	3,100	3,150	3,050	3,050	3,100	2,950	2,950	3,050
		3.20	3,150	3,150	3,200	3,150	3,150	3,150	3,050	3,050	3,100
		3.70	3,200	3,200	3,250	3,250	3,250	3,250	3,200	3,200	3,150
U	Length on ground	2.50	8,700	8,700	8,750	6,500	6,500	6,500	6,400	6,400	6,400
		2.80	5,700	5,700	8,500	6,300	6,300	6,300	6,150	6,150	6,150
		3.20	5,350	5,350	8,100	6,000	6,000	6,300	5,850	5,850	5,850
		3.70	4,850	4,850	7,600	5,600	5,600	5,600	5,450	5,450	5,450
V	Overall length			10,400			10,800			10,650	
	Bucket			1.60 m^3			1.60 m^3			1.60 m^3	

Transport Dimensions

removable elements disassembled

	Undercarriage / Stick m	Mono boom 6.20 m			Mono boom straight 6.50 m			Two-piece boom 6.40 m		
			mm			mm			mm	
Pad width		600	750	900	600	750	900	600	750	900
Transport width	NLC	2,990	3,140	3,290	2,990	3,140	3,290	2,990	3,140	3,290
	LC	3,190	3,340	3,490	3,190	3,340	3,490	3,190	3,340	3,490
	LC-V	2,990	3,140	3,290	2,990	3,140	3,290	2,990	3,140	3,290
		NLC	**LC**	**LC-V**	**NLC**	**LC**	**LC-V**	**NLC**	**LC**	**LC-V**
Transport length	2,50		10,400			10,800			10,650	
	2,80		10,400			10,800			10,650	
	3,20		10,400			10,800			10,650	
	3,70		10,400			10,800			10,650	
Transport height	2,50	3,150	3,150	3,285	3,150	3,150	3,285	3,150	3,150	3,285
	2,80	3,150	3,150	3,285	3,150	3,150	3,285	3,150	3,150	3,285
	3,20	3,150	3,150	3,285	3,150	3,150	3,285	3,150	3,150	3,285
	3,70	3,200	3,200	3,285	3,250	3,250	3,285	3,200	3,200	3,285

Backhoe Bucket

with Mono Boom 6.20 m and Counterweight 5.1 t

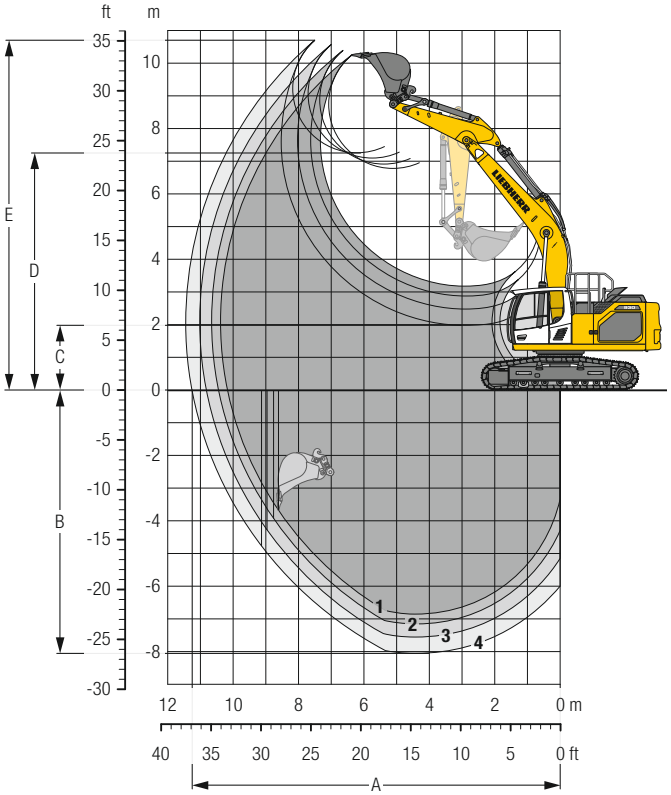

Digging Envelope

with quick coupler		1	2	3	4
Stick length	m	2.50	2.80	3.20	3.70
A Max. reach at ground level	m	10.17	10.45	10.82	11.26
B Max. digging depth	m	6.86	7.16	7.56	8.05
C Min. dumping height	m	3.18	2.88	2.48	1.98
D Max. dumping height	m	6.78	6.92	7.09	7.25
E Max. cutting height	m	10.25	10.38	10.56	10.70

Forces

without quick coupler		1	2	3	4
Stick digging force (ISO 6015)	kN	168	156	142	128
Bucket digging force (ISO 6015)	kN	204	204	204	204
Stick digging force (SAE J1179)	kN	160	149	136	123
Bucket digging force (SAE J1179)	kN	178	178	178	178

Operating Weight and Ground Pressure

The operating weight includes the basic machine with counterweight 5.1 t, mono boom 6.20 m, stick 3.20 m, quick coupler SWA 66 and bucket 1.60 m³ (1,170 kg).

Undercarriage		NLC		
Pad width	mm	600	750	900
Weight	kg	30,400	30,950	31,450
Ground pressure	kg/cm²	0.59	0.48	0.41

Undercarriage		LC		
Pad width	mm	600	750	900
Weight	kg	30,500	31,050	31,550
Ground pressure	kg/cm²	0.59	0.48	0.41

Undercarriage		LC-V		
Pad width	mm	600	750	900
Weight	kg	34,500	35,150	35,750
Ground pressure	kg/cm²	0.64	0.52	0.45

Optional: counterweight 6.2 t
(counterweight 6.2 t increases the operating weight by 1,100 kg and ground pressure by 0.02 kg/m²)
see load tables on pages 16 and 17

Buckets Machine stability per ISO 10567* (75% of tipping capacity)

	Cutting width	Capacity ISO 7451	Weight[3]	Weight[4]	NLC-Undercarriage (with track pads 600 mm) Stick length (m)								LC-Undercarriage (with track pads 600 mm) Stick length (m)								LC-V-Undercarriage (with track pads 600 mm) Stick length (m)							
					without quick coupler				with quick coupler				without quick coupler				with quick coupler				without quick coupler				with quick coupler			
	mm	m³	kg	kg	2.50	2.80	3.20	3.70	2.50	2.80	3.20	3.70	2.50	2.80	3.20	3.70	2.50	2.80	3.20	3.70	2.50	2.80	3.20	3.70	2.50	2.80	3.20	3.70
	with counterweight 5.1 t																											
STD[1]	1,050	1.00	870	930	▲	▲	▲	▲	▲	▲	▲	▲	▲	▲	▲	▲	▲	▲	▲	▲	▲	▲	▲	▲	▲	▲	▲	▲
	1,250	1.25	1,000	1,050	▲	▲	▲	▲	▲	▲	▲	■	▲	▲	▲	▲	▲	▲	▲	▲	▲	▲	▲	▲	▲	▲	▲	▲
	1,400	1.45	1,070	1,130	▲	▲	▲	■	▲	▲	■	▲	▲	▲	▲	▲	▲	▲	▲	■	▲	▲	▲	▲	▲	▲	▲	▲
	1,550	1.60	1,110	1,170	▲	▲	■	▲	▲	■	▲	△	▲	▲	▲	■	▲	▲	■	▲	▲	▲	▲	▲	▲	▲	▲	▲
	1,650	1.75	1,160	1,220	■	■	▲	△	■	▲	■	△	▲	▲	■	▲	▲	■	▲	■	▲	▲	▲	▲	▲	▲	▲	▲
	1,550	1.85	1,170	1,230	■	▲	■	△	▲	■	△	△	▲	■	▲	■	■	■	▲	△	▲	▲	▲	▲	▲	▲	▲	▲
	1,650	2.00	1,210	1,270	▲	■	△	△	■	△	△	–	■	▲	■	△	■	▲	■	△	▲	▲	▲	■	▲	▲	▲	■
	1,750	2.15	1,260	1,320	■	△	△	–	△	△	△	–	▲	■	△	△	▲	■	△	△	▲	▲	▲	■	▲	▲	■	▲
HD[2]	1,050	1.00	1,000	1,050	▲	▲	▲	▲	▲	▲	▲	▲	▲	▲	▲	▲	▲	▲	▲	▲	▲	▲	▲	▲	▲	▲	▲	▲
	1,250	1.25	1,140	1,200	▲	▲	▲	▲	▲	▲	▲	■	▲	▲	▲	▲	▲	▲	▲	▲	▲	▲	▲	▲	▲	▲	▲	▲
	1,400	1.45	1,230	1,290	▲	▲	■	▲	▲	▲	■	■	▲	▲	▲	▲	▲	▲	▲	■	▲	▲	▲	▲	▲	▲	▲	▲
	1,550	1.60	1,290	1,350	▲	■	▲	■	■	▲	■	△	▲	▲	■	▲	▲	▲	■	■	▲	▲	▲	▲	▲	▲	▲	▲
	1,650	1.75	1,350	1,410	■	▲	■	△	▲	■	△	△	▲	■	▲	■	▲	■	▲	△	▲	▲	▲	▲	▲	▲	▲	▲
	1,550	1.85	1,340	1,400	▲	▲	△	△	▲	■	△	–	▲	■	▲	■	■	▲	■	△	▲	▲	▲	▲	▲	▲	▲	■
	1,650	2.00	1,400	1,460	■	■	△	△	■	△	△	–	■	▲	■	△	▲	■	△	△	▲	▲	▲	■	▲	▲	▲	■
	1,750	2.15	1,450	1,510	△	△	△	–	△	△	–	–	▲	■	△	△	■	△	△	–	▲	▲	■	▲	▲	▲	■	▲
	with counterweight 6.2 t																											
STD[1]	1,050	1.00	870	930	▲	▲	▲	▲	▲	▲	▲	▲	▲	▲	▲	▲	▲	▲	▲	▲	▲	▲	▲	▲	▲	▲	▲	▲
	1,250	1.25	1,000	1,050	▲	▲	▲	▲	▲	▲	▲	▲	▲	▲	▲	▲	▲	▲	▲	▲	▲	▲	▲	▲	▲	▲	▲	▲
	1,400	1.45	1,070	1,130	▲	▲	▲	▲	▲	▲	▲	■	▲	▲	▲	▲	▲	▲	▲	▲	▲	▲	▲	▲	▲	▲	▲	▲
	1,550	1.60	1,110	1,170	▲	▲	▲	■	▲	▲	■	▲	▲	▲	▲	▲	▲	▲	▲	▲	▲	▲	▲	▲	▲	▲	▲	▲
	1,650	1.75	1,160	1,220	▲	▲	■	▲	▲	■	▲	■	▲	▲	▲	■	▲	▲	▲	■	▲	▲	▲	▲	▲	▲	▲	▲
	1,550	1.85	1,170	1,230	▲	■	■	■	▲	■	▲	■	▲	▲	▲	■	▲	▲	■	▲	▲	▲	▲	▲	▲	▲	▲	▲
	1,650	2.00	1,210	1,270	■	■	▲	■	■	▲	■	△	▲	▲	■	▲	▲	■	▲	■	▲	▲	▲	▲	▲	▲	▲	▲
	1,750	2.15	1,260	1,320	▲	▲	■	△	▲	■	△	△	▲	■	▲	■	■	▲	■	△	▲	▲	▲	▲	▲	▲	▲	■
HD[2]	1,050	1.00	1,000	1,050	▲	▲	▲	▲	▲	▲	▲	▲	▲	▲	▲	▲	▲	▲	▲	▲	▲	▲	▲	▲	▲	▲	▲	▲
	1,250	1.25	1,140	1,200	▲	▲	▲	▲	▲	▲	▲	▲	▲	▲	▲	▲	▲	▲	▲	▲	▲	▲	▲	▲	▲	▲	▲	▲
	1,400	1.45	1,230	1,290	▲	▲	▲	▲	▲	▲	▲	■	▲	▲	▲	▲	▲	▲	▲	▲	▲	▲	▲	▲	▲	▲	▲	▲
	1,550	1.60	1,290	1,350	▲	▲	▲	■	▲	▲	■	▲	▲	▲	▲	▲	▲	▲	▲	■	▲	▲	▲	▲	▲	▲	▲	▲
	1,650	1.75	1,350	1,410	▲	▲	■	▲	▲	■	▲	■	▲	▲	▲	■	▲	▲	■	▲	▲	▲	▲	▲	▲	▲	▲	▲
	1,550	1.85	1,340	1,400	▲	■	▲	■	■	■	■	△	▲	▲	■	▲	▲	▲	■	▲	▲	▲	▲	▲	▲	▲	▲	▲
	1,650	2.00	1,400	1,460	■	▲	■	△	▲	■	△	△	▲	■	▲	■	▲	■	▲	■	▲	▲	▲	▲	▲	▲	▲	▲
	1,750	2.15	1,450	1,510	▲	■	△	△	■	■	△	△	■	■	▲	△	■	▲	■	△	▲	▲	▲	■	▲	▲	▲	■

* Indicated loads are based on ISO 10567, at maximum reach, and may be swung 360° on firm and even ground

[1] Standard bucket with teeth Z 50

[2] HD bucket with teeth Z 50

[3] Bucket for direct mounting

[4] Bucket for mounting to quick coupler

Other buckets available upon request

Max. material weight ▲ = ≤ 2.0 t/m³, ■ = ≤ 1.8 t/m³, ▲ = ≤ 1.65 t/m³, ■ = ≤ 1.5 t/m³, △ = ≤ 1.2 t/m³, – = not authorised

Backhoe Bucket

with Mono Boom Straight 6.50 m and Counterweight 5.1 t

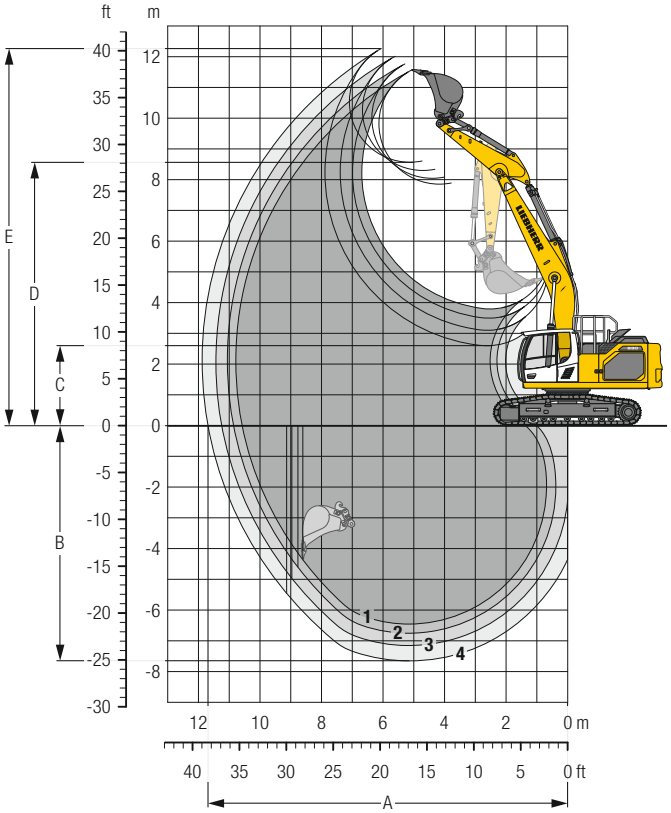

Digging Envelope

with quick coupler		1	2	3	4
Stick length	m	2.50	2.80	3.20	3.70
A Max. reach at ground level	m	10.58	10.86	11.24	11.69
B Max. digging depth	m	6.45	6.75	7.15	7.65
C Min. dumping height	m	3.79	3.49	3.10	2.60
D Max. dumping height	m	7.85	8.04	8.30	8.56
E Max. cutting height	m	11.57	11.76	12.02	12.26

Forces

without quick coupler		1	2	3	4
Stick digging force (ISO 6015)	kN	168	156	142	128
Bucket digging force (ISO 6015)	kN	204	204	204	204
Stick digging force (SAE J1179)	kN	160	149	136	123
Bucket digging force (SAE J1179)	kN	178	178	178	178

Operating Weight and Ground Pressure

The operating weight includes the basic machine with counterweight 5.1 t, mono boom straight 6.50 m, stick 3.20 m, quick coupler SWA 66 and bucket 1.60 m³ (1,170 kg).

Undercarriage		NLC		
Pad width	mm	600	750	900
Weight	kg	30,450	31,000	31,500
Ground pressure	kg/cm²	0.59	0.48	0.41

Undercarriage		LC		
Pad width	mm	600	750	900
Weight	kg	30,550	31,100	31,600
Ground pressure	kg/cm²	0.59	0.48	0.41

Undercarriage		LC-V		
Pad width	mm	600	750	900
Weight	kg	34,550	35,200	35,800
Ground pressure	kg/cm²	0.64	0.52	0.45

Optional: counterweight 6.2 t
(counterweight 6.2 t increases the operating weight by 1,100 kg and ground pressure by 0.02 kg/m²)
see load tables on pages 20 and 21

Buckets Machine stability per ISO 10567* (75% of tipping capacity)

	Cutting width	Capacity ISO 7451	Weight[3]	Weight[4]	NLC-Undercarriage (with track pads 600 mm) Stick length (m)								LC-Undercarriage (with track pads 600 mm) Stick length (m)								LC-V-Undercarriage (with track pads 600 mm) Stick length (m)							
					without quick coupler				with quick coupler				without quick coupler				with quick coupler				without quick coupler				with quick coupler			
	mm	m³	kg	kg	2.50	2.80	3.20	3.70	2.50	2.80	3.20	3.70	2.50	2.80	3.20	3.70	2.50	2.80	3.20	3.70	2.50	2.80	3.20	3.70	2.50	2.80	3.20	3.70
	with counterweight 5.1 t																											
STD[1]	1,050	1.00	870	930	▲	▲	▲	▲	▲	▲	▲	▲	▲	▲	▲	▲	▲	▲	▲	▲	▲	▲	▲	▲	▲	▲	▲	▲
	1,250	1.25	1,000	1,050	▲	▲	▲	■	▲	▲	■	▲	▲	▲	▲	▲	▲	▲	▲	■	▲	▲	▲	▲	▲	▲	▲	▲
	1,400	1.45	1,070	1,130	▲	■	■	■	■	■	■	△	▲	▲	▲	■	▲	▲	■	▲	▲	▲	▲	▲	▲	▲	▲	▲
	1,550	1.60	1,110	1,170	■	▲	■	△	▲	■	△	△	▲	▲	■	▲	▲	■	▲	△	▲	▲	▲	▲	▲	▲	▲	▲
	1,650	1.75	1,160	1,220	▲	■	△	△	■	△	△	–	■	■	▲	△	■	▲	■	△	▲	▲	▲	▲	▲	▲	▲	■
	1,550	1.85	1,170	1,230	■	■	△	△	■	△	△	–	■	▲	■	△	▲	■	△	△	▲	▲	▲	■	▲	▲	▲	■
	1,650	2.00	1,210	1,270	△	△	△	–	△	△	–	–	▲	■	△	△	■	△	△	–	▲	▲	■	▲	▲	▲	■	▲
	1,750	2.15	1,260	1,320	△	△	–	–	△	–	–	–	■	△	△	–	△	△	△	–	▲	■	■	■	▲	■	▲	■
HD[2]	1,050	1.00	1,000	1,050	▲	▲	▲	▲	▲	▲	▲	▲	▲	▲	▲	▲	▲	▲	▲	▲	▲	▲	▲	▲	▲	▲	▲	▲
	1,250	1.25	1,140	1,200	▲	▲	▲	■	▲	▲	■	■	▲	▲	▲	▲	▲	▲	▲	■	▲	▲	▲	▲	▲	▲	▲	▲
	1,400	1.45	1,230	1,290	▲	■	▲	■	■	▲	■	△	▲	▲	■	▲	▲	▲	■	■	▲	▲	▲	▲	▲	▲	▲	▲
	1,550	1.60	1,290	1,350	■	▲	■	△	▲	■	△	–	▲	■	▲	■	■	▲	■	△	▲	▲	▲	▲	▲	▲	▲	▲
	1,650	1.75	1,350	1,410	▲	■	△	△	■	△	△	–	■	▲	■	△	▲	■	△	△	▲	▲	▲	■	▲	▲	▲	■
	1,550	1.85	1,340	1,400	■	△	△	–	△	△	–	–	▲	▲	△	△	▲	■	△	–	▲	▲	▲	■	▲	▲	■	▲
	1,650	2.00	1,400	1,460	△	△	–	–	△	–	–	–	■	■	△	△	■	△	△	–	▲	▲	■	▲	▲	■	▲	■
	1,750	2.15	1,450	1,510	△	△	–	–	–	–	–	–	△	△	△	–	△	△	–	–	▲	■	▲	■	■	■	■	△
	with counterweight 6.2 t																											
STD[1]	1,050	1.00	870	930	▲	▲	▲	▲	▲	▲	▲	▲	▲	▲	▲	▲	▲	▲	▲	▲	▲	▲	▲	▲	▲	▲	▲	▲
	1,250	1.25	1,000	1,050	▲	▲	▲	▲	▲	▲	▲	▲	▲	▲	▲	▲	▲	▲	▲	▲	▲	▲	▲	▲	▲	▲	▲	▲
	1,400	1.45	1,070	1,130	▲	▲	▲	■	▲	▲	■	▲	▲	▲	▲	▲	▲	▲	▲	■	▲	▲	▲	▲	▲	▲	▲	▲
	1,550	1.60	1,110	1,170	▲	▲	■	▲	▲	■	▲	■	▲	▲	▲	■	▲	▲	■	▲	▲	▲	▲	▲	▲	▲	▲	▲
	1,650	1.75	1,160	1,220	▲	■	▲	■	■	▲	■	△	▲	▲	■	▲	▲	■	▲	■	▲	▲	▲	▲	▲	▲	▲	▲
	1,550	1.85	1,170	1,230	■	▲	■	△	▲	■	△	△	▲	■	■	■	▲	■	▲	■	▲	▲	▲	▲	▲	▲	▲	▲
	1,650	2.00	1,210	1,270	▲	■	△	△	■	■	△	–	■	■	▲	△	■	▲	■	△	▲	▲	▲	▲	▲	▲	▲	■
	1,750	2.15	1,260	1,320	■	△	△	△	△	△	△	–	▲	▲	■	△	▲	■	△	△	▲	▲	▲	■	▲	▲	■	▲
HD[2]	1,050	1.00	1,000	1,050	▲	▲	▲	▲	▲	▲	▲	▲	▲	▲	▲	▲	▲	▲	▲	▲	▲	▲	▲	▲	▲	▲	▲	▲
	1,250	1.25	1,140	1,200	▲	▲	▲	▲	▲	▲	▲	■	▲	▲	▲	▲	▲	▲	▲	▲	▲	▲	▲	▲	▲	▲	▲	▲
	1,400	1.45	1,230	1,290	▲	▲	▲	■	▲	▲	■	■	▲	▲	▲	▲	▲	▲	▲	■	▲	▲	▲	▲	▲	▲	▲	▲
	1,550	1.60	1,290	1,350	▲	■	■	■	■	■	▲	△	▲	▲	▲	■	▲	▲	■	▲	▲	▲	▲	▲	▲	▲	▲	▲
	1,650	1.75	1,350	1,410	■	▲	■	△	■	▲	△	△	▲	▲	■	▲	▲	■	▲	■	▲	▲	▲	▲	▲	▲	▲	▲
	1,550	1.85	1,340	1,400	■	▲	■	△	▲	■	△	△	▲	■	▲	■	■	▲	■	△	▲	▲	▲	▲	▲	▲	▲	■
	1,650	2.00	1,400	1,460	▲	■	△	△	■	△	△	–	■	▲	■	△	▲	■	△	△	▲	▲	▲	■	▲	▲	▲	■
	1,750	2.15	1,450	1,510	■	△	△	–	△	△	–	–	▲	■	△	△	■	■	△	–	▲	▲	■	▲	▲	▲	■	▲

* Indicated loads are based on ISO 10567, at maximum reach, and may be swung 360° on firm and even ground

[1] Standard bucket with teeth Z 50

[2] HD bucket with teeth Z 50

[3] Bucket for direct mounting

[4] Bucket for mounting to quick coupler

Other buckets available upon request

Max. material weight ▲ = ≤ 2.0 t/m³, ■ = ≤ 1.8 t/m³, ▲ = ≤ 1.65 t/m³, ■ = ≤ 1.5 t/m³, △ = ≤ 1.2 t/m³, – = not authorised

Backhoe Bucket

with Two-Piece Boom 6.40 m and Counterweight 5.1 t

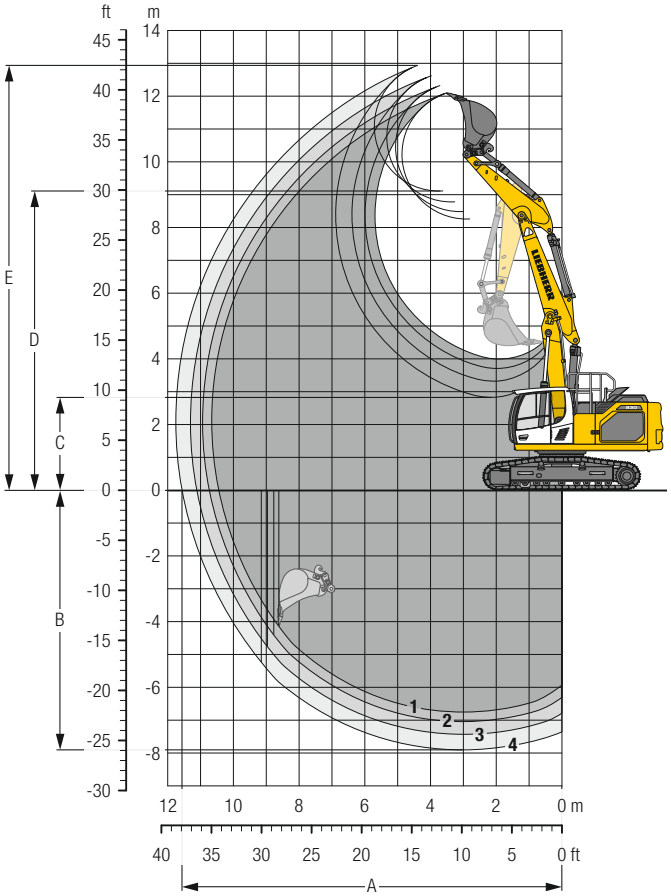

Digging Envelope

with quick coupler		1	2	3	4
Stick length	m	2.50	2.80	3.20	3.70
A Max. reach at ground level	m	10.45	10.73	11.11	11.56
B Max. digging depth	m	6.75	7.05	7.43	7.91
C Min. dumping height	m	4.00	3.71	3.32	2.83
D Max. dumping height	m	8.26	8.49	8.79	9.11
E Max. cutting height	m	12.09	12.32	12.62	12.93

Forces

without quick coupler		1	2	3	4
Stick digging force (ISO 6015)	kN	168	156	142	128
Bucket digging force (ISO 6015)	kN	204	204	204	204
Stick digging force (SAE J1179)	kN	160	149	136	123
Bucket digging force (SAE J1179)	kN	178	178	178	178

Operating Weight and Ground Pressure

The operating weight includes the basic machine with counterweight 5.1 t, two-piece boom 6.40 m, stick 3.20 m, quick coupler SWA 66 and bucket 1.60 m³ (1,170 kg).

Undercarriage		NLC		
Pad width	mm	600	750	900
Weight	kg	31,300	31,800	32,350
Ground pressure	kg/cm²	0.61	0.50	0.42

Undercarriage		LC		
Pad width	mm	600	750	900
Weight	kg	31,400	31,950	32,450
Ground pressure	kg/cm²	0.61	0.50	0.42

Undercarriage		LC-V		
Pad width	mm	600	750	900
Weight	kg	35,400	36,050	36,650
Ground pressure	kg/cm²	0.66	0.54	0.46

Optional: counterweight 6.2 t
(counterweight 6.2 t increases the operating weight by 1,100 kg and ground pressure by 0.02 kg/m²)
see load tables on pages 24 and 25

Buckets Machine stability per ISO 10567* (75% of tipping capacity)

	Cutting width	Capacity ISO 7451	Weight[3]	Weight[4]	NLC-Undercarriage (with track pads 600 mm) Stick length (m)								LC-Undercarriage (with track pads 600 mm) Stick length (m)								LC-V-Undercarriage (with track pads 600 mm) Stick length (m)							
					without quick coupler				with quick coupler				without quick coupler				with quick coupler				without quick coupler				with quick coupler			
	mm	m³	kg	kg	2.50	2.80	3.20	3.70	2.50	2.80	3.20	3.70	2.50	2.80	3.20	3.70	2.50	2.80	3.20	3.70	2.50	2.80	3.20	3.70	2.50	2.80	3.20	3.70
	with counterweight 5.1 t																											
STD[1]	1,050	1.00	870	930	▲	▲	▲	▲	▲	▲	▲	▲	▲	▲	▲	▲	▲	▲	▲	▲	▲	▲	▲	▲	▲	▲	▲	▲
	1,250	1.25	1,000	1,050	▲	▲	▲	■	▲	▲	■	▲	▲	▲	▲	▲	▲	▲	▲	▲	▲	▲	▲	▲	▲	▲	▲	▲
	1,400	1.45	1,070	1,130	▲	▲	■	■	▲	■	▲	△	▲	▲	▲	■	▲	▲	■	▲	▲	▲	▲	▲	▲	▲	▲	▲
	1,550	1.60	1,110	1,170	■	■	■	△	■	▲	△	△	▲	▲	■	▲	▲	■	▲	■	▲	▲	▲	▲	▲	▲	▲	▲
	1,650	1.75	1,160	1,220	▲	■	△	△	■	△	△	–	▲	■	▲	■	■	▲	■	△	▲	▲	▲	▲	▲	▲	▲	■
	1,550	1.85	1,170	1,230	▲	■	△	△	■	△	△	–	■	▲	■	△	▲	■	△	△	▲	▲	▲	■	▲	▲	▲	■
	1,650	2.00	1,210	1,270	■	△	△	–	△	△	–	–	▲	■	△	△	■	△	△	–	▲	▲	▲	■	▲	▲	■	▲
	1,750	2.15	1,260	1,320	△	△	–	–	△	–	–	–	■	△	△	–	△	△	△	–	▲	▲	■	▲	▲	■	▲	■
HD[2]	1,050	1.00	1,000	1,050	▲	▲	▲	▲	▲	▲	▲	▲	▲	▲	▲	▲	▲	▲	▲	▲	▲	▲	▲	▲	▲	▲	▲	▲
	1,250	1.25	1,140	1,200	▲	▲	▲	■	▲	▲	■	▲	▲	▲	▲	▲	▲	▲	▲	■	▲	▲	▲	▲	▲	▲	▲	▲
	1,400	1.45	1,230	1,290	▲	■	▲	■	■	▲	■	△	▲	▲	▲	▲	▲	▲	■	■	▲	▲	▲	▲	▲	▲	▲	▲
	1,550	1.60	1,290	1,350	■	▲	■	△	▲	■	△	△	▲	■	▲	■	■	■	■	△	▲	▲	▲	▲	▲	▲	▲	▲
	1,650	1.75	1,350	1,410	▲	■	△	△	■	△	△	–	■	▲	■	△	▲	■	△	△	▲	▲	▲	▲	▲	▲	▲	■
	1,550	1.85	1,340	1,400	■	△	△	–	△	△	–	–	■	▲	■	△	▲	■	△	△	▲	▲	▲	■	▲	▲	■	▲
	1,650	2.00	1,400	1,460	△	△	△	–	△	△	–	–	▲	■	△	△	■	△	△	–	▲	▲	■	▲	▲	▲	■	■
	1,750	2.15	1,450	1,510	△	△	–	–	△	–	–	–	■	△	△	–	△	△	–	–	▲	■	▲	■	■	■	▲	■
	with counterweight 6.2 t																											
STD[1]	1,050	1.00	870	930	▲	▲	▲	▲	▲	▲	▲	▲	▲	▲	▲	▲	▲	▲	▲	▲	▲	▲	▲	▲	▲	▲	▲	▲
	1,250	1.25	1,000	1,050	▲	▲	▲	▲	▲	▲	▲	▲	▲	▲	▲	▲	▲	▲	▲	▲	▲	▲	▲	▲	▲	▲	▲	▲
	1,400	1.45	1,070	1,130	▲	▲	▲	■	▲	▲	■	▲	▲	▲	▲	▲	▲	▲	▲	▲	▲	▲	▲	▲	▲	▲	▲	▲
	1,550	1.60	1,110	1,170	▲	▲	■	▲	▲	■	▲	■	▲	▲	▲	■	▲	▲	▲	■	▲	▲	▲	▲	▲	▲	▲	▲
	1,650	1.75	1,160	1,220	▲	■	▲	■	■	▲	■	△	▲	▲	■	▲	▲	▲	■	■	▲	▲	▲	▲	▲	▲	▲	▲
	1,550	1.85	1,170	1,230	■	▲	■	△	■	▲	■	△	▲	▲	■	▲	▲	■	▲	■	▲	▲	▲	▲	▲	▲	▲	▲
	1,650	2.00	1,210	1,270	▲	■	△	△	▲	■	△	△	■	■	▲	■	■	▲	■	△	▲	▲	▲	▲	▲	▲	▲	■
	1,750	2.15	1,260	1,320	■	■	△	△	■	△	△	–	■	▲	■	△	▲	■	△	△	▲	▲	▲	■	▲	▲	■	▲
HD[2]	1,050	1.00	1,000	1,050	▲	▲	▲	▲	▲	▲	▲	▲	▲	▲	▲	▲	▲	▲	▲	▲	▲	▲	▲	▲	▲	▲	▲	▲
	1,250	1.25	1,140	1,200	▲	▲	▲	▲	▲	▲	▲	■	▲	▲	▲	▲	▲	▲	▲	▲	▲	▲	▲	▲	▲	▲	▲	▲
	1,400	1.45	1,230	1,290	▲	▲	▲	■	▲	▲	■	▲	▲	▲	▲	▲	▲	▲	▲	■	▲	▲	▲	▲	▲	▲	▲	▲
	1,550	1.60	1,290	1,350	▲	▲	■	■	▲	■	▲	△	▲	▲	▲	■	▲	▲	■	▲	▲	▲	▲	▲	▲	▲	▲	▲
	1,650	1.75	1,350	1,410	■	■	▲	△	■	▲	■	△	▲	▲	■	▲	▲	■	▲	■	▲	▲	▲	▲	▲	▲	▲	▲
	1,550	1.85	1,340	1,400	■	▲	■	△	▲	■	△	△	▲	■	▲	■	■	■	▲	△	▲	▲	▲	▲	▲	▲	▲	▲
	1,650	2.00	1,400	1,460	▲	■	△	△	■	△	△	–	■	▲	■	△	■	▲	■	△	▲	▲	▲	■	▲	▲	▲	■
	1,750	2.15	1,450	1,510	■	△	△	–	△	△	–	–	▲	■	△	△	▲	■	△	△	▲	▲	▲	■	▲	▲	■	▲

* Indicated loads are based on ISO 10567, at maximum reach, and may be swung 360° on firm and even ground

[1] Standard bucket with teeth Z 50

[2] HD bucket with teeth Z 50

[3] Bucket for direct mounting

[4] Bucket for mounting to quick coupler

Other buckets available upon request

Max. material weight ▲ = ≤ 2.0 t/m³, ■ = ≤ 1.8 t/m³, ▲ = ≤ 1.65 t/m³, ■ = ≤ 1.5 t/m³, △ = ≤ 1.2 t/m³, – = not authorised

Lift Capacities

with Mono Boom 6.20 m, Counterweight 5.1 t and Track Pads 600 mm

Stick 2.50 m

Under-carriage	m	3.0 m		4.5 m		6.0 m		7.5 m		9.0 m				m
NLC	9.0													
	7.5					7.3	9.0*					6.5	8.3*	**6.4**
	6.0					7.2	9.3*					5.1	8.1*	**7.5**
	4.5			10.5	12.8*	6.9	10.2*	4.9	8.0			4.4	7.1	**8.1**
	3.0			9.6	15.3*	6.5	11.1	4.7	7.8			4.0	6.6	**8.4**
	1.5			9.1	16.5*	6.2	10.7	4.6	7.7			3.9	6.5	**8.4**
	0			8.9	16.2*	6.0	10.5	4.5	7.5			4.0	6.7	**8.2**
	−1.5	13.0*	13.0*	8.9	15.0*	6.0	10.4	4.5	7.5			4.4	7.4	**7.6**
	−3.0	15.9*	15.9*	9.1	12.8*	6.1	9.9*					5.3	8.5*	**6.7**
	−4.5			8.7*	8.7*							7.4*	7.4*	**5.2**
	−6.0													
LC	9.0													
	7.5					8.0	9.0*					7.1	8.3*	**6.4**
	6.0					7.9	9.3*					5.6	8.1*	**7.5**
	4.5			11.6	12.8*	7.5	10.2*	5.4	8.1			4.8	7.2	**8.1**
	3.0			10.7	15.3*	7.1	11.2	5.2	7.9			4.4	6.7	**8.4**
	1.5			10.1	16.5*	6.8	10.8	5.0	7.7			4.3	6.6	**8.4**
	0			10.0	16.2*	6.6	10.6	4.9	7.6			4.4	6.8	**8.2**
	−1.5	13.0*	13.0*	10.0	15.0*	6.6	10.6	4.9	7.6			4.9	7.5	**7.6**
	−3.0	15.9*	15.9*	10.2	12.8*	6.7	9.9*					5.9	8.5*	**6.7**
	−4.5			8.7*	8.7*							7.4*	7.4*	**5.2**
	−6.0													
LC-V	9.0													
	7.5					9.0*	9.0*					8.3*	8.3*	**6.4**
	6.0					9.3*	9.3*	6.8	8.2*			6.8	8.1*	**7.5**
	4.5			13.1*	13.1*	9.4	10.3*	6.7	8.9*			6.0	8.2*	**8.1**
	3.0			13.6	15.4*	9.0	11.3*	6.5	9.3*			5.6	8.0	**8.4**
	1.5			13.1	16.5*	8.7	12.1*	6.4	9.2			5.5	7.9	**8.4**
	0			12.9	16.2*	8.5	12.2*	6.3	9.1			5.7	8.2	**8.2**
	−1.5	13.8*	13.8*	13.0	14.9*	8.5	11.5*	6.3	8.8*			6.2	8.7*	**7.6**
	−3.0	15.5*	15.5*	12.6*	12.6*	8.6	9.6*					7.6	8.4*	**6.7**
	−4.5			8.2*	8.2*							7.2*	7.2*	**5.2**
	−6.0													

Stick 2.80 m

Under-carriage	m	3.0 m		4.5 m		6.0 m		7.5 m		9.0 m				m
NLC	9.0													
	7.5					7.4	8.5*					6.0	7.3*	**6.8**
	6.0					7.3	8.9*	5.1	8.2			4.8	7.1*	**7.8**
	4.5	18.5*	18.5*	10.6	12.2*	6.9	9.8*	4.9	8.1			4.1	6.8	**8.4**
	3.0			9.7	14.7*	6.5	11.0*	4.7	7.8			3.8	6.3	**8.6**
	1.5			9.1	16.2*	6.2	10.7	4.5	7.6			3.7	6.2	**8.7**
	0			8.9	16.3*	6.0	10.4	4.4	7.5			3.8	6.3	**8.4**
	−1.5	12.5*	12.5*	8.8	15.3*	5.9	10.4	4.4	7.5			4.1	6.9	**7.9**
	−3.0	17.1*	17.1*	9.0	13.4*	6.0	10.3*					4.9	8.3*	**7.0**
	−4.5	12.1*	12.1*	9.3	9.7*							6.9	7.6*	**5.6**
	−6.0													
LC	9.0													
	7.5					8.1	8.5*					6.6	7.3*	**6.8**
	6.0					7.9	8.9*	5.5	8.2*			5.2	7.1*	**7.8**
	4.5	18.5*	18.5*	11.7	12.2*	7.6	9.8*	5.4	8.1			4.5	6.8	**8.4**
	3.0			10.8	14.7*	7.2	11.0*	5.2	7.9			4.2	6.4	**8.6**
	1.5			10.1	16.2*	6.8	10.8	5.0	7.7			4.1	6.2	**8.7**
	0			9.9	16.3*	6.6	10.6	4.9	7.6			4.2	6.4	**8.4**
	−1.5	12.5*	12.5*	9.9	15.3*	6.5	10.5	4.9	7.6			4.6	7.0	**7.9**
	−3.0	17.1*	17.1*	10.0	13.4*	6.6	10.3*					5.4	8.3*	**7.0**
	−4.5	12.1*	12.1*	9.7*	9.7*							7.6*	7.6*	**5.6**
	−6.0													
LC-V	9.0											8.0*	8.0*	
	7.5					8.5*	8.5*					7.3*	7.3*	**6.8**
	6.0					8.9*	8.9*	6.9	8.3*			6.4	7.1*	**7.8**
	4.5			12.5*	12.5*	9.4	9.9*	6.7	8.6*			5.7	7.2*	**8.4**
	3.0			13.7	14.9*	9.0	11.0*	6.5	9.1*			5.3	7.6*	**8.6**
	1.5			13.1	16.3*	8.6	11.9*	6.3	9.2			5.2	7.5	**8.7**
	0			12.8	16.3*	8.4	12.1*	6.2	9.1			5.4	7.7	**8.4**
	−1.5	13.2*	13.2*	12.8	15.2*	8.4	11.6*	6.2	9.0*			5.9	8.4*	**7.9**
	−3.0	16.7*	16.7*	13.0	13.1*	8.5	10.1*					7.0	8.3*	**7.0**
	−4.5	11.5*	11.5*	9.3*	9.3*							7.4*	7.4*	**5.6**
	−6.0													

Height **Can be slewed through 360°** **In longitudinal position of undercarriage** **Max. reach** *** Limited by hydr. capacity**

The load values are quoted in tons (t) at stick end (without bucket), and may be swung 360° on firm and even ground. Adjacent values are valid for the undercarriage when in the longitudinal position. Capacities are valid for 600 mm wide track pads. Indicated loads are based on ISO 10567 standard and do not exceed 75 % of tipping or 87 % of hydraulic capacity (indicated via *). Without bucket cylinder, link and lever the lift capacities will increase by 410 kg. Lifting capacity of the excavator is limited by machine stability and hydraulic capacity.
According to European Standard, EN 474-5: In the European Union excavators have to be equipped with an overload warning device, a load diagram and automatic safety check valves on hoist cylinders and stick cylinder(s), when they are used for lifting operations which require the use of lifting accessories.

Stick 3.20 m

Under-carriage	m	3.0 m		4.5 m		6.0 m		7.5 m		9.0 m				m
NLC	9.0											6.9*	6.9*	5.8
	7.5											5.4	6.3*	7.2
	6.0					7.3	8.4*	5.1	7.8*			4.4	6.1*	8.2
	4.5			10.8	11.4*	7.0	9.3*	4.9	8.1			3.9	6.2*	8.7
	3.0			9.9	14.0*	6.5	10.5*	4.7	7.8	3.6	5.9	3.6	5.9	9.0
	1.5			9.1	15.8*	6.2	10.7	4.5	7.6	3.5	5.8	3.5	5.8	9.0
	0	6.5*	6.5*	8.8	16.3*	5.9	10.4	4.4	7.4			3.5	5.9	8.8
	−1.5	12.0*	12.0*	8.7	15.7*	5.8	10.3	4.3	7.4			3.8	6.4	8.3
	−3.0	17.3	18.6*	8.8	14.0*	5.9	10.3					4.4	7.5	7.5
	−4.5	14.0*	14.0*	9.1	10.9*	6.1	8.0*					5.9	7.6*	6.2
	−6.0													
LC	9.0											6.9*	6.9*	5.8
	7.5											5.9	6.3*	7.2
	6.0					8.0	8.4*	5.6	7.8*			4.8	6.1*	8.2
	4.5			11.4*	11.4*	7.6	9.3*	5.4	8.2			4.2	6.2*	8.7
	3.0			11.0	14.0*	7.2	10.5*	5.2	7.9	3.9	6.0	3.9	6.0	9.0
	1.5			10.2	15.8*	6.8	10.8	5.0	7.7	3.8	5.9	3.8	5.8	9.0
	0	6.5*	6.5*	9.8	16.3*	6.6	10.5	4.8	7.5			3.9	6.0	8.8
	−1.5	12.0*	12.0*	9.8	15.7*	6.5	10.4	4.8	7.5			4.2	6.5	8.3
	−3.0	18.6*	18.6*	9.9	14.0*	6.5	10.5					4.9	7.6	7.5
	−4.5	14.0*	14.0*	10.2	10.9*	6.7	8.0*					6.5	7.6*	6.2
	−6.0													
LC-V	9.0											6.8*	6.8*	5.8
	7.5											6.3*	6.3*	7.2
	6.0					8.4*	8.4*	6.9	7.8*			5.9	6.1*	8.2
	4.5	17.0*	17.0*	11.7*	11.7*	9.4*	9.4*	6.7	8.2*			5.3	6.2*	8.7
	3.0			13.9	14.2*	9.0	10.6*	6.5	8.8*	5.0	6.6*	5.0	6.5*	9.0
	1.5			13.1	15.9*	8.6	11.6*	6.3	9.2	4.9	7.0	4.9	7.0*	9.0
	0	7.0*	7.0*	12.8	16.3*	8.4	12.1*	6.2	9.0			5.0	7.2	8.8
	−1.5	12.5*	12.5*	12.7	15.5*	8.3	11.8*	6.1	9.0			5.4	7.9	8.3
	−3.0	18.3*	18.3*	12.9	13.8*	8.4	10.5*					6.3	8.0*	7.5
	−4.5	13.5*	13.5*	10.5*	10.5*	7.6*	7.6*					7.5*	7.5*	6.2
	−6.0													

Stick 3.70 m

Under-carriage	m	3.0 m		4.5 m		6.0 m		7.5 m		9.0 m				m
NLC	9.0											5.7*	5.7*	6.5
	7.5							5.2	6.0*			4.9	5.3*	7.8
	6.0							5.2	7.3*			4.0	5.1*	8.6
	4.5					7.1	8.7*	5.0	7.8*	3.7	5.9*	3.6	5.2*	9.2
	3.0	11.4*	11.4*	10.1	13.1*	6.6	10.0*	4.7	7.9	3.6	5.9	3.3	5.4*	9.4
	1.5			9.3	15.3*	6.2	10.7	4.5	7.6	3.5	5.8	3.2	5.4	9.5
	0	7.6*	7.6*	8.8	16.2*	5.9	10.4	4.3	7.4	3.4	5.7	3.2	5.5	9.2
	−1.5	11.6*	11.6*	8.6	15.9*	5.8	10.2	4.3	7.3			3.5	5.9	8.8
	−3.0	17.0*	17.0*	8.7	14.6*	5.7	10.2	4.3	7.3			3.9	6.7	8.0
	−4.5	16.1*	16.1*	8.9	12.1*	5.9	9.1*					5.0	7.6*	6.8
	−6.0			7.1*	7.1*							6.5*	6.5*	4.9
LC	9.0											5.7*	5.7*	6.5
	7.5							5.7	6.0*			5.3*	5.3*	7.8
	6.0							5.6	7.3*			4.4	5.1*	8.6
	4.5					7.7	8.7*	5.5	7.8*	4.0	5.9*	3.9	5.2*	9.2
	3.0	11.4*	11.4*	11.2	13.1*	7.3	10.0*	5.2	8.0	3.9	6.0	3.6	5.4*	9.4
	1.5			10.3	15.3*	6.8	10.9	5.0	7.7	3.8	5.8	3.5	5.4	9.5
	0	7.6*	7.6*	9.9	16.2*	6.5	10.5	4.8	7.5	3.7	5.8	3.6	5.5	9.2
	−1.5	11.6*	11.6*	9.7	15.9*	6.4	10.3	4.7	7.4			3.8	5.9	8.8
	−3.0	17.0*	17.0*	9.7	14.6*	6.4	10.3	4.7	7.4			4.4	6.8	8.0
	−4.5	16.1*	16.1*	10.0	12.1*	6.5	9.1*					5.6	7.6*	6.8
	−6.0			7.1*	7.1*							6.5*	6.5*	4.9
LC-V	9.0											5.6*	5.6*	6.5
	7.5							6.2*	6.2*			5.2*	5.2*	7.8
	6.0							7.0	7.3*			5.1*	5.1*	8.6
	4.5					8.8*	8.8*	6.8	7.8*	5.1	6.1*	4.9	5.2*	9.2
	3.0	9.7*	9.7*	13.3*	13.3*	9.1	10.1*	6.5	8.5*	5.0	7.1	4.6	5.4*	9.4
	1.5	5.3*	5.3*	13.3	15.4*	8.7	11.3*	6.3	9.1*	4.9	7.0	4.5	5.8*	9.5
	0	7.9*	7.9*	12.8	16.2*	8.4	11.9*	6.1	9.0	4.8	6.9	4.6	6.5*	9.2
	−1.5	12.0*	12.0*	12.6	15.9*	8.2	11.9*	6.0	8.9			5.0	7.2	8.8
	−3.0	17.6*	17.6*	12.7	14.5*	8.2	11.0*	6.1	8.4*			5.7	7.7*	8.0
	−4.5	15.7*	15.7*	11.8*	11.8*	8.4	8.8*					7.3	7.5*	6.8
	−6.0													4.9

Height **Can be slewed through 360°** **In longitudinal position of undercarriage** **Max. reach** *** Limited by hydr. capacity**

The load values are quoted in tons (t) at stick end (without bucket), and may be swung 360° on firm and even ground. Adjacent values are valid for the undercarriage when in the longitudinal position. Capacities are valid for 600 mm wide track pads. Indicated loads are based on ISO 10567 standard and do not exceed 75 % of tipping or 87 % of hydraulic capacity (indicated via *). Without bucket cylinder, link and lever the lift capacities will increase by 410 kg. Lifting capacity of the excavator is limited by machine stability and hydraulic capacity.
According to European Standard, EN 474-5: In the European Union excavators have to be equipped with an overload warning device, a load diagram and automatic safety check valves on hoist cylinders and stick cylinder(s), when they are used for lifting operations which require the use of lifting accessories.

Lift Capacities

with Mono Boom 6.20 m, Counterweight 6.2 t and Track Pads 600 mm

Stick 2.50 m

Under-carriage	m	3.0 m		4.5 m		6.0 m		7.5 m		9.0 m				m
NLC	9.0													
	7.5					8.1	9.0*					7.2	8.3*	**6.4**
	6.0					7.9	9.3*					5.6	8.1*	**7.5**
	4.5			11.6	12.8*	7.6	10.2*	5.5	8.8			4.9	7.8	**8.1**
	3.0			10.7	15.3*	7.2	11.2*	5.3	8.6			4.5	7.2	**8.4**
	1.5			10.1	16.5*	6.9	11.7	5.1	8.4			4.4	7.1	**8.4**
	0			10.0	16.2*	6.7	11.5	5.0	8.3			4.5	7.4	**8.2**
	−1.5	13.0*	13.0*	10.0	15.0*	6.7	11.4	5.0	8.3			4.9	8.1	**7.6**
	−3.0	15.9*	15.9*	10.2	12.8*	6.8	9.9*					5.9	8.5*	**6.7**
	−4.5			8.7*	8.7*							7.4*	7.4*	**5.2**
	−6.0													
LC	9.0													
	7.5					8.8	9.0*					7.8	8.3*	**6.4**
	6.0					8.6	9.3*					6.1	8.1*	**7.5**
	4.5			12.7	12.8*	8.3	10.2*	6.0	8.8*			5.3	7.9	**8.1**
	3.0			11.8	15.3*	7.9	11.2*	5.8	8.6			4.9	7.3	**8.4**
	1.5			11.2	16.5*	7.6	11.8	5.6	8.5			4.8	7.2	**8.4**
	0			11.1	16.2*	7.4	11.6	5.5	8.3			4.9	7.4	**8.2**
	−1.5	13.0*	13.0*	11.1	15.0*	7.4	11.5	5.5	8.3			5.4	8.2	**7.6**
	−3.0	15.9*	15.9*	11.3	12.8*	7.5	9.9*					6.5	8.5*	**6.7**
	−4.5			8.7*	8.7*							7.4*	7.4*	**5.2**
	−6.0													
LC-V	9.0													
	7.5					9.0*	9.0*					8.3*	8.3*	**6.4**
	6.0					9.3*	9.3*	7.4	8.2*			7.4	8.1*	**7.5**
	4.5			13.1*	13.1*	10.2	10.3*	7.3	8.9*			6.5	8.2*	**8.1**
	3.0			14.8	15.4*	9.8	11.3*	7.1	9.3*			6.1	8.6*	**8.4**
	1.5			14.3	16.5*	9.5	12.1*	7.0	9.7*			6.0	8.5	**8.4**
	0			14.1	16.2*	9.3	12.2*	6.9	9.6*			6.2	8.7*	**8.2**
	−1.5	13.8*	13.8*	14.2	14.9*	9.3	11.5*	6.9	8.8*			6.8	8.7*	**7.6**
	−3.0	15.5*	15.5*	12.6*	12.6*	9.4	9.6*					8.3	8.4*	**6.7**
	−4.5			8.2*	8.2*							7.2*	7.2*	**5.2**
	−6.0													

Stick 2.80 m

Under-carriage	m	3.0 m		4.5 m		6.0 m		7.5 m		9.0 m				m
NLC	9.0													
	7.5					8.1	8.5*					6.6	7.3*	**6.8**
	6.0					8.0	8.9*	5.6	8.2*			5.3	7.1*	**7.8**
	4.5	18.5*	18.5*	11.7	12.2*	7.6	9.8*	5.5	8.6*			4.6	7.2*	**8.4**
	3.0			10.8	14.7*	7.2	11.0*	5.3	8.6			4.3	6.9	**8.6**
	1.5			10.1	16.2*	6.9	11.7	5.1	8.3			4.2	6.8	**8.7**
	0			9.9	16.3*	6.7	11.4	5.0	8.2			4.3	7.0	**8.4**
	−1.5	12.5*	12.5*	9.9	15.3*	6.6	11.3	4.9	8.2			4.6	7.6	**7.9**
	−3.0	17.1*	17.1*	10.0	13.4*	6.7	10.3*					5.5	8.3*	**7.0**
	−4.5	12.1*	12.1*	9.7*	9.7*							7.6*	7.6*	**5.6**
	−6.0													
LC	9.0													
	7.5					8.5*	8.5*					7.2	7.3*	**6.8**
	6.0					8.7	8.9*	6.1	8.2*			5.8	7.1*	**7.8**
	4.5	18.5*	18.5*	12.2*	12.2*	8.3	9.8*	6.0	8.6*			5.0	7.2*	**8.4**
	3.0			11.9	14.7*	7.9	11.0*	5.8	8.6			4.7	7.0	**8.6**
	1.5			11.3	16.2*	7.6	11.8	5.6	8.4			4.6	6.8	**8.7**
	0			11.0	16.3*	7.3	11.5	5.5	8.3			4.7	7.0	**8.4**
	−1.5	12.5*	12.5*	11.0	15.3*	7.3	11.5	5.4	8.3			5.1	7.7	**7.9**
	−3.0	17.1*	17.1*	11.1	13.4*	7.4	10.3*					6.0	8.3*	**7.0**
	−4.5	12.1*	12.1*	9.7*	9.7*							7.6*	7.6*	**5.6**
	−6.0													
LC-V	9.0											8.0*	8.0*	
	7.5					8.5*	8.5*					7.3*	7.3*	**6.8**
	6.0					8.9*	8.9*	7.5	8.3*			7.0	7.1*	**7.8**
	4.5			12.5*	12.5*	9.9*	9.9*	7.3	8.6*			6.2	7.2*	**8.4**
	3.0			14.9*	14.9*	9.8	11.0*	7.1	9.1*			5.8	7.6*	**8.6**
	1.5			14.3	16.3*	9.4	11.9*	6.9	9.5*			5.7	8.1	**8.7**
	0			14.1	16.3*	9.2	12.1*	6.8	9.6*			5.9	8.4	**8.4**
	−1.5	13.2*	13.2*	14.1	15.2*	9.2	11.6*	6.8	9.0*			6.4	8.4*	**7.9**
	−3.0	16.7*	16.7*	13.1*	13.1*	9.3	10.1*					7.7	8.3*	**7.0**
	−4.5	11.5*	11.5*	9.3*	9.3*							7.4*	7.4*	**5.6**
	−6.0													

Height **Can be slewed through 360°** **In longitudinal position of undercarriage** **Max. reach** *** Limited by hydr. capacity**

The load values are quoted in tons (t) at stick end (without bucket), and may be swung 360° on firm and even ground. Adjacent values are valid for the undercarriage when in the longitudinal position. Capacities are valid for 600 mm wide track pads. Indicated loads are based on ISO 10567 standard and do not exceed 75 % of tipping or 87 % of hydraulic capacity (indicated via *). Without bucket cylinder, link and lever the lift capacities will increase by 410 kg. Lifting capacity of the excavator is limited by machine stability and hydraulic capacity.
According to European Standard, EN 474-5: In the European Union excavators have to be equipped with an overload warning device, a load diagram and automatic safety check valves on hoist cylinders and stick cylinder(s), when they are used for lifting operations which require the use of lifting accessories.

Stick 3.20 m

Under-carriage	m	3.0 m		4.5 m		6.0 m		7.5 m		9.0 m				m
NLC	9.0											6.9*	6.9*	5.8
	7.5											6.0	6.3*	7.2
	6.0					8.0	8.4*	5.6	7.8*			4.9	6.1*	8.2
	4.5			11.4*	11.4*	7.7	9.3*	5.5	8.2*			4.3	6.2*	8.7
	3.0			10.9	14.0*	7.3	10.5*	5.3	8.6	4.0	6.5	4.0	6.4*	9.0
	1.5			10.2	15.8*	6.9	11.6*	5.1	8.3	3.9	6.4	3.9	6.3	9.0
	0	6.5*	6.5*	9.9	16.3*	6.6	11.4	4.9	8.2			4.0	6.5	8.8
	−1.5	12.0*	12.0*	9.8	15.7*	6.5	11.3	4.9	8.1			4.3	7.0	8.3
	−3.0	18.6*	18.6*	9.9	14.0*	6.6	10.7*					5.0	8.0*	7.5
	−4.5	14.0*	14.0*	10.2	10.9*	6.8	8.0*					6.6	7.6*	6.2
	−6.0													
LC	9.0											6.9*	6.9*	5.8
	7.5											6.3*	6.3*	7.2
	6.0					8.4*	8.4*	6.1	7.8*			5.3	6.1*	8.2
	4.5			11.4*	11.4*	8.4	9.3*	6.0	8.2*			4.7	6.2*	8.7
	3.0			12.1	14.0*	7.9	10.5*	5.8	8.6	4.4	6.5*	4.4	6.4*	9.0
	1.5			11.3	15.8*	7.6	11.6*	5.6	8.4	4.3	6.4	4.3	6.4	9.0
	0	6.5*	6.5*	11.0	16.3*	7.3	11.5	5.4	8.2			4.4	6.6	8.8
	−1.5	12.0*	12.0*	10.9	15.7*	7.2	11.4	5.3	8.2			4.7	7.1	8.3
	−3.0	18.6*	18.6*	11.0	14.0*	7.3	10.7*					5.5	8.0*	7.5
	−4.5	14.0*	14.0*	10.9*	10.9*	7.5	8.0*					7.2	7.6*	6.2
	−6.0													
LC-V	9.0											6.8*	6.8*	5.8
	7.5											6.3*	6.3*	7.2
	6.0					8.4*	8.4*	7.5	7.8*			6.1*	6.1*	8.2
	4.5	17.0*	17.0*	11.7*	11.7*	9.4*	9.4*	7.3	8.2*			5.8	6.2*	8.7
	3.0			14.2*	14.2*	9.8	10.6*	7.1	8.8*	5.5	6.6*	5.4	6.5*	9.0
	1.5			14.3	15.9*	9.4	11.6*	6.9	9.3*	5.4	7.2*	5.3	7.0*	9.0
	0	7.0*	7.0*	14.0	16.3*	9.2	12.1*	6.8	9.5*			5.5	7.8	8.8
	−1.5	12.5*	12.5*	13.9	15.5*	9.1	11.8*	6.7	9.2*			6.0	8.1*	8.3
	−3.0	18.3*	18.3*	13.8*	13.8*	9.2	10.5*					7.0	8.0*	7.5
	−4.5	13.5*	13.5*	10.5*	10.5*	7.6*	7.6*					7.5*	7.5*	6.2
	−6.0													

Stick 3.70 m

Under-carriage	m	3.0 m		4.5 m		6.0 m		7.5 m		9.0 m				m
NLC	9.0											5.7*	5.7*	6.5
	7.5							5.8	6.0*			5.3*	5.3*	7.8
	6.0							5.7	7.3*			4.5	5.1*	8.6
	4.5					7.8	8.7*	5.5	7.8*	4.1	5.9*	4.0	5.2*	9.2
	3.0	11.4*	11.4*	11.2	13.1*	7.3	10.0*	5.3	8.4*	4.0	6.5	3.7	5.4*	9.4
	1.5			10.3	15.3*	6.9	11.2*	5.1	8.3	3.9	6.3	3.6	5.8*	9.5
	0	7.6*	7.6*	9.9	16.2*	6.6	11.4	4.9	8.1	3.8	6.2	3.7	6.0	9.2
	−1.5	11.6*	11.6*	9.7	15.9*	6.5	11.2	4.8	8.0			3.9	6.4	8.8
	−3.0	17.0*	17.0*	9.7	14.6*	6.5	11.1*	4.8	8.0			4.5	7.4	8.0
	−4.5	16.1*	16.1*	10.0	12.1*	6.6	9.1*					5.7	7.6*	6.8
	−6.0			7.1*	7.1*							6.5*	6.5*	4.9
LC	9.0											5.7*	5.7*	6.5
	7.5							6.0*	6.0*			5.3*	5.3*	7.8
	6.0							6.2	7.3*			4.9	5.1*	8.6
	4.5					8.5	8.7*	6.0	7.8*	4.5	5.9*	4.3	5.2*	9.2
	3.0	11.4*	11.4*	12.3	13.1*	8.0	10.0*	5.8	8.4*	4.4	6.5	4.1	5.4*	9.4
	1.5			11.4	15.3*	7.6	11.2*	5.5	8.4	4.3	6.4	4.0	5.8*	9.5
	0	7.6*	7.6*	11.0	16.2*	7.3	11.5	5.4	8.2	4.2	6.3	4.0	6.1	9.2
	−1.5	11.6*	11.6*	10.8	15.9*	7.1	11.3	5.3	8.1			4.3	6.5	8.8
	−3.0	17.0*	17.0*	10.8	14.6*	7.1	11.1*	5.3	8.1			4.9	7.5	8.0
	−4.5	16.1*	16.1*	11.1	12.1*	7.3	9.1*					6.2	7.6*	6.8
	−6.0			7.1*	7.1*							6.5*	6.5*	4.9
LC-V	9.0											5.6*	5.6*	6.5
	7.5							6.2*	6.2*			5.2*	5.2*	7.8
	6.0							7.3*	7.3*			5.1*	5.1*	8.6
	4.5					8.8*	8.8*	7.4	7.8*	5.6	6.1*	5.2*	5.2*	9.2
	3.0	9.7*	9.7*	13.3*	13.3*	9.9	10.1*	7.1	8.5*	5.5	7.4*	5.1	5.4*	9.4
	1.5	5.3*	5.3*	14.5	15.4*	9.5	11.3*	6.9	9.1*	5.3	7.6	5.0	5.8*	9.5
	0	7.9*	7.9*	14.0	16.2*	9.2	11.9*	6.7	9.4*	5.2	7.5	5.1	6.5*	9.2
	−1.5	12.0*	12.0*	13.9	15.9*	9.0	11.9*	6.6	9.3*			5.5	7.7*	8.8
	−3.0	17.6*	17.6*	13.9	14.5*	9.0	11.0*	6.7	8.4*			6.3	7.7*	8.0
	−4.5	15.7*	15.7*	11.8*	11.8*	8.8*	8.8*					7.5*	7.5*	6.8
	−6.0													4.9

Height **Can be slewed through 360°** **In longitudinal position of undercarriage** **Max. reach** *** Limited by hydr. capacity**

The load values are quoted in tons (t) at stick end (without bucket), and may be swung 360° on firm and even ground. Adjacent values are valid for the undercarriage when in the longitudinal position. Capacities are valid for 600 mm wide track pads. Indicated loads are based on ISO 10567 standard and do not exceed 75 % of tipping or 87 % of hydraulic capacity (indicated via *). Without bucket cylinder, link and lever the lift capacities will increase by 410 kg. Lifting capacity of the excavator is limited by machine stability and hydraulic capacity.
According to European Standard, EN 474-5: In the European Union excavators have to be equipped with an overload warning device, a load diagram and automatic safety check valves on hoist cylinders and stick cylinder(s), when they are used for lifting operations which require the use of lifting accessories.

Lift Capacities

with Mono Boom Straight 6.50 m, Counterweight 5.1 t and Track Pads 600 mm

Stick 2.50 m

Under-carriage	m	3.0 m		4.5 m		6.0 m		7.5 m		9.0 m				m
NLC	10.5													
	9.0											8.5	9.4*	**5.4**
	7.5					7.3	9.7*					5.7	8.4*	**6.9**
	6.0			11.1	12.2*	7.1	10.1*	5.0	8.1			4.5	7.4	**7.9**
	4.5			10.2	14.3*	6.7	10.9*	4.8	7.9			4.0	6.5	**8.5**
	3.0			9.3	15.2*	6.3	10.8	4.6	7.7			3.7	6.1	**8.8**
	1.5			8.8	9.4*	6.0	10.5	4.5	7.5			3.6	6.0	**8.8**
	0			8.7	13.6*	5.9	10.3	4.4	7.4			3.7	6.2	**8.6**
	−1.5	9.1*	9.1*	8.8	13.3*	5.8	10.3	4.4	7.4			4.0	6.8	**8.0**
	−3.0	11.0*	11.0*	9.0	10.6*	6.0	8.6*					4.8	6.5*	**7.2**
	−4.5													
LC	10.5													
	9.0											9.3	9.4*	**5.4**
	7.5					7.9	9.7*					6.2	8.4*	**6.9**
	6.0			12.2	12.2*	7.7	10.1*	5.4	8.2			5.0	7.5	**7.9**
	4.5			11.3	14.3*	7.4	10.9*	5.3	8.0			4.4	6.6	**8.5**
	3.0			10.3	15.2*	7.0	11.0	5.1	7.8			4.1	6.2	**8.8**
	1.5			9.4*	9.4*	6.6	10.6	4.9	7.6			4.0	6.1	**8.8**
	0			9.8	13.6*	6.5	10.4	4.8	7.5			4.1	6.3	**8.6**
	−1.5	9.1*	9.1*	9.8	13.3*	6.5	10.4	4.8	7.5			4.4	6.9	**8.0**
	−3.0	11.0*	11.0*	10.0	10.6*	6.6	8.6*					5.3	6.5*	**7.2**
	−4.5													
LC-V	10.5													
	9.0											9.2*	9.2*	**5.4**
	7.5					9.7*	9.7*					7.5	8.4*	**6.9**
	6.0			12.4*	12.4*	9.6	10.2*	6.8	8.9*			6.2	8.1*	**7.9**
	4.5			14.2	14.5*	9.2	11.0*	6.6	9.2*			5.5	7.8	**8.5**
	3.0			13.2	13.7*	8.8	11.8*	6.4	9.3			5.1	7.4	**8.8**
	1.5			9.5*	9.5*	8.5	12.2*	6.3	9.1			5.1	7.3	**8.8**
	0			12.7	14.2*	8.3	11.8*	6.2	9.0			5.2	7.6	**8.6**
	−1.5	10.0*	10.0*	12.8	13.1*	8.3	10.6*	6.2	8.2*			5.7	7.3*	**8.0**
	−3.0	10.6*	10.6*	10.3*	10.3*	8.4*	8.4*					6.4*	6.4*	**7.2**
	−4.5													

Stick 2.80 m

Under-carriage	m	3.0 m		4.5 m		6.0 m		7.5 m		9.0 m				m
NLC	10.5													
	9.0											7.5	8.2*	**5.9**
	7.5					7.3	9.3*					5.3	7.4*	**7.3**
	6.0			11.2*	11.2*	7.1	9.8*	5.0	8.1			4.3	7.0	**8.2**
	4.5			10.3	13.7*	6.7	10.6*	4.8	7.9			3.8	6.2	**8.8**
	3.0			9.4	15.7*	6.3	10.9	4.6	7.7	3.5	5.8	3.5	5.8	**9.1**
	1.5			8.8	11.9*	6.0	10.5	4.4	7.5	3.4	5.8	3.4	5.7	**9.1**
	0			8.7	14.3*	5.8	10.3	4.3	7.4			3.5	5.9	**8.9**
	−1.5	9.3*	9.3*	8.7	13.8*	5.8	10.2	4.3	7.4			3.8	6.4	**8.3**
	−3.0	12.5*	12.5*	8.9	11.2*	5.9	9.1*	4.4	6.5*			4.4	6.5*	**7.5**
	−4.5			7.3*	7.3*	5.4*	5.4*					4.9*	4.9*	**6.2**
LC	10.5													
	9.0											8.2*	8.2*	**5.9**
	7.5					8.0	9.3*					5.7	7.4*	**7.3**
	6.0			11.2*	11.2*	7.8	9.8*	5.5	8.2			4.7	7.1	**8.2**
	4.5			11.4	13.7*	7.4	10.6*	5.3	8.0			4.1	6.3	**8.8**
	3.0			10.4	15.7*	7.0	11.0	5.1	7.8	3.9	5.9	3.8	5.9	**9.1**
	1.5			9.8	11.9*	6.6	10.6	4.9	7.6	3.8	5.8	3.8	5.8	**9.1**
	0			9.7	14.3*	6.4	10.4	4.8	7.5			3.9	5.9	**8.9**
	−1.5	9.3*	9.3*	9.7	13.8*	6.4	10.3	4.8	7.4			4.2	6.4	**8.3**
	−3.0	12.5*	12.5*	9.9	11.2*	6.5	9.1*	4.9	6.5*			4.9	6.5*	**7.5**
	−4.5			7.3*	7.3*	5.4*	5.4*					4.9*	4.9*	**6.2**
LC-V	10.5													
	9.0					8.2*	8.2*					8.0*	8.0*	**5.9**
	7.5					9.4*	9.4*					7.0	7.3*	**7.3**
	6.0			11.6*	11.6*	9.6	9.8*	6.8	8.7*			5.8	7.1*	**8.2**
	4.5			13.9*	13.9*	9.2	10.7*	6.6	9.0*			5.2	7.1*	**8.8**
	3.0			13.3	15.9*	8.8	11.6*	6.4	9.3	4.9	7.1	4.9	7.0	**9.1**
	1.5			11.9*	11.9*	8.5	12.1*	6.2	9.1	4.9	7.0	4.8	6.9	**9.1**
	0			12.6	14.8*	8.3	11.8*	6.1	9.0			4.9	7.2	**8.9**
	−1.5	9.9*	9.9*	12.7	13.6*	8.3	10.8*	6.1	8.5*			5.4	7.1*	**8.3**
	−3.0	12.2*	12.2*	11.0*	11.0*	8.4	8.8*					6.3	6.4*	**7.5**
	−4.5			6.8*	6.8*	4.9*	4.9*					4.7*	4.7*	**6.2**

Height **Can be slewed through 360°** **In longitudinal position of undercarriage** **Max. reach** *** Limited by hydr. capacity**

The load values are quoted in tons (t) at stick end (without bucket), and may be swung 360° on firm and even ground. Adjacent values are valid for the undercarriage when in the longitudinal position. Capacities are valid for 600 mm wide track pads. Indicated loads are based on ISO 10567 standard and do not exceed 75 % of tipping or 87 % of hydraulic capacity (indicated via *). Without bucket cylinder, link and lever the lift capacities will increase by 410 kg. Lifting capacity of the excavator is limited by machine stability and hydraulic capacity.
According to European Standard, EN 474-5: In the European Union excavators have to be equipped with an overload warning device, a load diagram and automatic safety check valves on hoist cylinders and stick cylinder(s), when they are used for lifting operations which require the use of lifting accessories.

Stick 3.20 m

Under-carriage	m	3.0 m		4.5 m		6.0 m		7.5 m		9.0 m				m
NLC	10.5													
	9.0					7.4	8.0*					6.5	6.9*	6.4
	7.5					7.4	8.6*	5.1	7.3*			4.8	6.3*	7.8
	6.0					7.2	9.3*	5.0	8.2			3.9	6.1*	8.6
	4.5			10.5	13.0*	6.8	10.2*	4.8	8.0	3.6	5.9	3.5	5.8	9.2
	3.0			9.5	15.2*	6.4	10.9	4.6	7.7	3.5	5.8	3.3	5.4	9.4
	1.5			8.8	14.9*	6.0	10.5	4.4	7.5	3.4	5.7	3.2	5.3	9.5
	0			8.6	15.1*	5.8	10.2	4.3	7.3	3.3	5.7	3.2	5.5	9.2
	−1.5	9.1*	9.1*	8.6	14.4*	5.7	10.1	4.2	7.3			3.5	5.9	8.8
	−3.0	14.4*	14.4*	8.7	12.1*	5.7	9.6*	4.3	7.3*			4.0	6.4*	8.0
	−4.5			8.5*	8.5*	6.0	6.6*					5.1	5.2*	6.8
LC	10.5													
	9.0					8.0*	8.0*					6.9*	6.9*	6.4
	7.5					8.1	8.6*	5.6	7.3*			5.2	6.3*	7.8
	6.0					7.9	9.3*	5.5	8.3			4.3	6.1*	8.6
	4.5			11.6	13.0*	7.5	10.2*	5.3	8.1	4.0	6.0	3.8	5.8	9.2
	3.0			10.6	15.2*	7.0	11.0	5.1	7.8	3.9	5.9	3.6	5.5	9.4
	1.5			9.9	14.9*	6.6	10.6	4.9	7.6	3.8	5.8	3.5	5.4	9.5
	0			9.6	15.1*	6.4	10.3	4.7	7.4	3.7	5.7	3.6	5.5	9.2
	−1.5	9.1*	9.1*	9.6	14.4*	6.3	10.3	4.7	7.4			3.8	6.0	8.8
	−3.0	14.4*	14.4*	9.7	12.1*	6.4	9.6*	4.7	7.3*			4.4	6.4*	8.0
	−4.5			8.5*	8.5*	6.6	6.6*					5.2*	5.2*	6.8
LC-V	10.5													
	9.0					8.2*	8.2*					6.8*	6.8*	6.4
	7.5					8.7*	8.7*	6.9	7.5*			6.3*	6.3*	7.8
	6.0			9.2*	9.2*	9.4*	9.4*	6.8	8.3*			5.4	6.1*	8.6
	4.5			13.2*	13.2*	9.3	10.3*	6.6	8.7*	5.0	7.2	4.8	6.1*	9.2
	3.0			13.5	15.3*	8.8	11.3*	6.4	9.2*	4.9	7.1	4.6	6.3*	9.4
	1.5			12.8	14.6*	8.5	11.9*	6.2	9.1	4.8	7.0	4.5	6.5	9.5
	0			12.6	15.4*	8.2	11.9*	6.1	8.9	4.7	6.9	4.6	6.7	9.2
	−1.5	9.6*	9.6*	12.6	14.2*	8.2	11.1*	6.0	8.7*			5.0	6.9*	8.8
	−3.0	14.0*	14.0*	11.8*	11.8*	8.2	9.4*	6.1	7.0*			5.7	6.3*	8.0
	−4.5			8.1*	8.1*	6.2*	6.2*					5.1*	5.1*	6.8

Stick 3.70 m

Under-carriage	m	3.0 m		4.5 m		6.0 m		7.5 m		9.0 m				m
NLC	10.5											6.7*	6.7*	5.2
	9.0					7.2*	7.2*					5.6	5.7*	7.1
	7.5					7.3*	7.3*	5.2	6.9*			4.3	5.3*	8.3
	6.0					7.3	7.8*	5.1	7.7*	3.7	5.6*	3.6	5.1*	9.1
	4.5	17.3*	17.3*	10.8	11.4*	6.9	9.7*	4.9	8.0	3.6	6.0	3.2	5.2*	9.6
	3.0			9.7	14.4*	6.4	10.8*	4.6	7.7	3.5	5.8	3.0	5.0	9.9
	1.5			8.9	15.9*	6.0	10.5	4.4	7.5	3.4	5.7	2.9	4.9	9.9
	0	4.9*	4.9*	8.6	16.0*	5.7	10.2	4.2	7.3	3.3	5.6	3.0	5.0	9.7
	−1.5	9.0*	9.0*	8.5	15.0*	5.6	10.1	4.1	7.2	3.3	5.6	3.2	5.4	9.2
	−3.0	14.1*	14.1*	8.5	13.0*	5.6	10.1	4.2	7.2			3.6	6.1	8.5
	−4.5	11.9*	11.9*	8.8	9.9*	5.8	7.8*					4.4	5.5*	7.4
LC	10.5											6.7*	6.7*	5.2
	9.0					7.2*	7.2*					5.7*	5.7*	7.1
	7.5					7.3*	7.3*	5.6	6.9*			4.7	5.3*	8.3
	6.0					7.8*	7.8*	5.5	7.7*	4.0	5.6*	4.0	5.1*	9.1
	4.5	17.3*	17.3*	11.4*	11.4*	7.6	9.7*	5.3	8.1	4.0	6.0	3.5	5.2*	9.6
	3.0			10.8	14.4*	7.1	10.8*	5.1	7.8	3.9	5.9	3.3	5.1	9.9
	1.5			10.0	15.9*	6.7	10.7	4.9	7.6	3.7	5.8	3.2	5.0	9.9
	0	4.9*	4.9*	9.6	16.0*	6.4	10.3	4.7	7.4	3.6	5.7	3.3	5.1	9.7
	−1.5	9.0*	9.0*	9.5	15.0*	6.2	10.2	4.6	7.3	3.6	5.6	3.5	5.5	9.2
	−3.0	14.1*	14.1*	9.6	13.0*	6.3	10.2*	4.6	7.3			4.0	6.2	8.5
	−4.5	11.9*	11.9*	9.8	9.9*	6.4	7.8*					4.9	5.5*	7.4
LC-V	10.5											6.6*	6.6*	5.2
	9.0					7.3*	7.3*					5.7*	5.7*	7.1
	7.5					7.3*	7.3*	7.0	7.0*			5.3*	5.3*	8.3
	6.0					7.9*	7.9*	6.9	7.8*	5.1	5.8*	4.9	5.1*	9.1
	4.5	17.9*	17.9*	12.3*	12.3*	9.4	9.8*	6.7	8.4*	5.0	7.2	4.5	5.2*	9.6
	3.0			13.8	14.6*	8.9	10.9*	6.4	8.9*	4.9	7.1	4.2	5.3*	9.9
	1.5			12.9	16.0*	8.5	11.7*	6.2	9.1	4.8	6.9	4.2	5.7*	9.9
	0	5.3*	5.3*	12.5	16.0*	8.2	11.9*	6.0	8.9	4.7	6.8	4.3	6.2	9.7
	−1.5	9.4*	9.4*	12.4	14.9*	8.1	11.4*	5.9	8.8	4.7	6.8	4.6	6.6*	9.2
	−3.0	14.7*	14.7*	12.5	12.8*	8.1	10.0*	6.0	7.7*			5.2	6.2*	8.5
	−4.5	11.4*	11.4*	9.5*	9.5*	7.5*	7.5*					5.3*	5.3*	7.4

Height **Can be slewed through 360°** **In longitudinal position of undercarriage** **Max. reach** *** Limited by hydr. capacity**

The load values are quoted in tons (t) at stick end (without bucket), and may be swung 360° on firm and even ground. Adjacent values are valid for the undercarriage when in the longitudinal position. Capacities are valid for 600 mm wide track pads. Indicated loads are based on ISO 10567 standard and do not exceed 75 % of tipping or 87 % of hydraulic capacity (indicated via *). Without bucket cylinder, link and lever the lift capacities will increase by 410 kg. Lifting capacity of the excavator is limited by machine stability and hydraulic capacity.
According to European Standard, EN 474-5: In the European Union excavators have to be equipped with an overload warning device, a load diagram and automatic safety check valves on hoist cylinders and stick cylinder(s), when they are used for lifting operations which require the use of lifting accessories.

Lift Capacities

with Mono Boom Straight 6.50 m, Counterweight 6.2 t and Track Pads 600 mm

Stick 2.50 m

Under-carriage	m	3.0 m		4.5 m		6.0 m		7.5 m		9.0 m				m
NLC	10.5													
	9.0											9.3	9.4*	**5.4**
	7.5					8.0	9.7*					6.3	8.4*	**6.9**
	6.0			12.1	12.2*	7.8	10.1*	5.5	8.8			5.1	8.1*	**7.9**
	4.5			11.2	14.3*	7.4	10.9*	5.4	8.7			4.4	7.1	**8.5**
	3.0			10.3	15.2*	7.0	11.8*	5.2	8.4			4.1	6.7	**8.8**
	1.5			9.4*	9.4*	6.7	11.5	5.0	8.3			4.1	6.6	**8.8**
	0			9.8	13.6*	6.6	11.3	4.9	8.1			4.2	6.8	**8.6**
	−1.5	9.1*	9.1*	9.9	13.3*	6.6	10.7*	4.9	8.2			4.5	7.4*	**8.0**
	−3.0	11.0*	11.0*	10.1	10.6*	6.7	8.6*					5.4	6.5*	**7.2**
	−4.5													
LC	10.5													
	9.0											9.4*	9.4*	**5.4**
	7.5					8.7	9.7*					6.8	8.4*	**6.9**
	6.0			12.2*	12.2*	8.5	10.1*	6.0	8.9			5.5	8.1*	**7.9**
	4.5			12.4	14.3*	8.1	10.9*	5.9	8.7			4.9	7.2	**8.5**
	3.0			11.4	15.2*	7.7	11.8*	5.7	8.5			4.5	6.8	**8.8**
	1.5			9.4*	9.4*	7.4	11.6	5.5	8.3			4.4	6.6	**8.8**
	0			10.9	13.6*	7.2	11.4	5.4	8.2			4.6	6.9	**8.6**
	−1.5	9.1*	9.1*	11.0	13.3*	7.2	10.7*	5.4	8.2			5.0	7.4*	**8.0**
	−3.0	11.0*	11.0*	10.6*	10.6*	7.4	8.6*					5.9	6.5*	**7.2**
	−4.5													
LC-V	10.5													
	9.0											9.2*	9.2*	**5.4**
	7.5					9.7*	9.7*					8.2	8.4*	**6.9**
	6.0			12.4*	12.4*	10.2*	10.2*	7.4	8.9*			6.7	8.1*	**7.9**
	4.5			14.5*	14.5*	10.0	11.0*	7.2	9.2*			6.0	8.1*	**8.5**
	3.0			13.7*	13.7*	9.6	11.8*	7.0	9.5*			5.6	8.0	**8.8**
	1.5			9.5*	9.5*	9.3	12.2*	6.9	9.6*			5.5	7.9	**8.8**
	0			13.9	14.2*	9.1	11.8*	6.8	9.3*			5.7	7.7*	**8.6**
	−1.5	10.0*	10.0*	13.1*	13.1*	9.1	10.6*	6.8	8.2*			6.3	7.3*	**8.0**
	−3.0	10.6*	10.6*	10.3*	10.3*	8.4*	8.4*					6.4*	6.4*	**7.2**
	−4.5													

Stick 2.80 m

Under-carriage	m	3.0 m		4.5 m		6.0 m		7.5 m		9.0 m				m
NLC	10.5													
	9.0											8.2*	8.2*	**5.9**
	7.5					8.0	9.3*					5.8	7.4*	**7.3**
	6.0			11.2*	11.2*	7.8	9.8*	5.5	8.7*			4.8	7.1*	**8.2**
	4.5			11.4	13.7*	7.5	10.6*	5.4	8.7			4.2	6.8	**8.8**
	3.0			10.4	15.7*	7.0	11.6*	5.2	8.4	4.0	6.4	3.9	6.4	**9.1**
	1.5			9.9	11.9*	6.7	11.5	5.0	8.2	3.9	6.3	3.8	6.3	**9.1**
	0			9.7	14.3*	6.5	11.3	4.9	8.1			3.9	6.4	**8.9**
	−1.5	9.3*	9.3*	9.7	13.8*	6.5	10.9*	4.8	8.1			4.3	7.0	**8.3**
	−3.0	12.5*	12.5*	9.9	11.2*	6.6	9.1*	5.0	6.5*			5.0	6.5*	**7.5**
	−4.5			7.3*	7.3*	5.4*	5.4*					4.9*	4.9*	**6.2**
LC	10.5													
	9.0											8.2*	8.2*	**5.9**
	7.5					8.8	9.3*					6.3	7.4*	**7.3**
	6.0			11.2*	11.2*	8.5	9.8*	6.0	8.7*			5.2	7.1*	**8.2**
	4.5			12.5	13.7*	8.2	10.6*	5.9	8.8			4.6	6.8	**8.8**
	3.0			11.5	15.7*	7.7	11.6*	5.6	8.5	4.3	6.5	4.3	6.4	**9.1**
	1.5			11.0	11.9*	7.4	11.6	5.5	8.3	4.3	6.4	4.2	6.3	**9.1**
	0			10.8	14.3*	7.2	11.4	5.3	8.2			4.3	6.5	**8.9**
	−1.5	9.3*	9.3*	10.8	13.8*	7.2	10.9*	5.3	8.2			4.7	7.1	**8.3**
	−3.0	12.5*	12.5*	11.0	11.2*	7.3	9.1*	5.5	6.5*			5.4	6.5*	**7.5**
	−4.5			7.3*	7.3*	5.4*	5.4*					4.9*	4.9*	**6.2**
LC-V	10.5													
	9.0					8.2*	8.2*					8.0*	8.0*	**5.9**
	7.5					9.4*	9.4*					7.3*	7.3*	**7.3**
	6.0			11.6*	11.6*	9.8*	9.8*	7.4	8.7*			6.3	7.1*	**8.2**
	4.5			13.9*	13.9*	10.0	10.7*	7.2	9.0*			5.7	7.1*	**8.8**
	3.0			14.5	15.9*	9.6	11.6*	7.0	9.4*	5.4	7.7	5.4	7.4*	**9.1**
	1.5			11.9*	11.9*	9.3	12.1*	6.8	9.6*	5.3	7.6	5.3	7.5	**9.1**
	0			13.9	14.8*	9.1	11.8*	6.7	9.3*			5.4	7.5*	**8.9**
	−1.5	9.9*	9.9*	13.6*	13.6*	9.1	10.8*	6.7	8.5*			5.9	7.1*	**8.3**
	−3.0	12.2*	12.2*	11.0*	11.0*	8.8*	8.8*					6.4*	6.4*	**7.5**
	−4.5			6.8*	6.8*	4.9*	4.9*					4.7*	4.7*	**6.2**

Height **Can be slewed through 360°** **In longitudinal position of undercarriage** **Max. reach** *** Limited by hydr. capacity**

The load values are quoted in tons (t) at stick end (without bucket), and may be swung 360° on firm and even ground. Adjacent values are valid for the undercarriage when in the longitudinal position. Capacities are valid for 600 mm wide track pads. Indicated loads are based on ISO 10567 standard and do not exceed 75 % of tipping or 87 % of hydraulic capacity (indicated via *). Without bucket cylinder, link and lever the lift capacities will increase by 410 kg. Lifting capacity of the excavator is limited by machine stability and hydraulic capacity.
According to European Standard, EN 474-5: In the European Union excavators have to be equipped with an overload warning device, a load diagram and automatic safety check valves on hoist cylinders and stick cylinder(s), when they are used for lifting operations which require the use of lifting accessories.

Stick 3.20 m

Under-carriage	m	3.0 m		4.5 m		6.0 m		7.5 m		9.0 m				m
NLC	10.5													
	9.0					8.0*	8.0*					6.9*	6.9*	**6.4**
	7.5					8.1	8.6*	5.6	7.3*			5.3	6.3*	**7.8**
	6.0					7.9	9.3*	5.6	8.3*			4.4	6.1*	**8.6**
	4.5			11.6	13.0*	7.5	10.2*	5.4	8.7	4.0	6.5	3.9	6.1*	**9.2**
	3.0			10.6	15.2*	7.1	11.2*	5.2	8.4	3.9	6.4	3.7	6.0	**9.4**
	1.5			9.9	14.9*	6.7	11.5	5.0	8.2	3.8	6.3	3.6	5.9	**9.5**
	0			9.6	15.1*	6.5	11.2	4.8	8.0	3.8	6.2	3.7	6.0	**9.2**
	−1.5	9.1*	9.1*	9.6	14.4*	6.4	11.1	4.8	8.0			3.9	6.5	**8.8**
	−3.0	14.4*	14.4*	9.8	12.1*	6.5	9.6*	4.8	7.3*			4.5	6.4*	**8.0**
	−4.5			8.5*	8.5*	6.6*	6.6*					5.2*	5.2*	**6.8**
LC	10.5													
	9.0					8.0*	8.0*					6.9*	6.9*	**6.4**
	7.5					8.6*	8.6*	6.1	7.3*			5.8	6.3*	**7.8**
	6.0					8.6	9.3*	6.1	8.3*			4.8	6.1*	**8.6**
	4.5			12.7	13.0*	8.2	10.2*	5.9	8.7*	4.4	6.6	4.3	6.1*	**9.2**
	3.0			11.7	15.2*	7.8	11.2*	5.6	8.5	4.3	6.5	4.0	6.0	**9.4**
	1.5			11.0	14.9*	7.4	11.6	5.4	8.3	4.2	6.4	3.9	5.9	**9.5**
	0			10.7	15.1*	7.1	11.3	5.3	8.1	4.2	6.3	4.0	6.1	**9.2**
	−1.5	9.1*	9.1*	10.7	14.4*	7.1	11.2*	5.2	8.1			4.3	6.5	**8.8**
	−3.0	14.4*	14.4*	10.9	12.1*	7.1	9.6*	5.3	7.3*			4.9	6.4*	**8.0**
	−4.5			8.5*	8.5*	6.6*	6.6*					5.2*	5.2*	**6.8**
LC-V	10.5													
	9.0					8.2*	8.2*					6.8*	6.8*	**6.4**
	7.5					8.7*	8.7*	7.5	7.5*			6.3*	6.3*	**7.8**
	6.0			9.2*	9.2*	9.4*	9.4*	7.4	8.3*			5.9	6.1*	**8.6**
	4.5			13.2*	13.2*	10.1	10.3*	7.2	8.7*	5.5	7.3*	5.3	6.1*	**9.2**
	3.0			14.7	15.3*	9.6	11.3*	7.0	9.2*	5.4	7.6	5.0	6.3*	**9.4**
	1.5			14.0	14.6*	9.3	11.9*	6.8	9.5*	5.3	7.5	4.9	6.7*	**9.5**
	0			13.8	15.4*	9.0	11.9*	6.7	9.4*	5.2	7.4*	5.1	7.2*	**9.2**
	−1.5	9.6*	9.6*	13.8	14.2*	9.0	11.1*	6.6	8.7*			5.5	6.9*	**8.8**
	−3.0	14.0*	14.0*	11.8*	11.8*	9.0	9.4*	6.7	7.0*			6.3*	6.3*	**8.0**
	−4.5			8.1*	8.1*	6.2*	6.2*					5.1*	5.1*	**6.8**

Stick 3.70 m

Under-carriage	m	3.0 m		4.5 m		6.0 m		7.5 m		9.0 m				m
NLC	10.5											6.7*	6.7*	**5.2**
	9.0					7.2*	7.2*					5.7*	5.7*	**7.1**
	7.5					7.3*	7.3*	5.7	6.9*			4.8	5.3*	**8.3**
	6.0					7.8*	7.8*	5.6	7.7*	4.1	5.6*	4.0	5.1*	**9.1**
	4.5	17.3*	17.3*	11.4*	11.4*	7.6	9.7*	5.4	8.3*	4.1	6.5	3.6	5.2*	**9.6**
	3.0			10.8	14.4*	7.1	10.8*	5.2	8.5	3.9	6.4	3.4	5.3*	**9.9**
	1.5			10.0	15.9*	6.7	11.5	4.9	8.2	3.8	6.3	3.3	5.4	**9.9**
	0	4.9*	4.9*	9.6	16.0*	6.5	11.2	4.8	8.0	3.7	6.2	3.4	5.6	**9.7**
	−1.5	9.0*	9.0*	9.5	15.0*	6.3	11.1	4.7	7.9	3.7	6.1	3.6	5.9	**9.2**
	−3.0	14.1*	14.1*	9.6	13.0*	6.3	10.2*	4.7	7.9*			4.0	6.3*	**8.5**
	−4.5	11.9*	11.9*	9.8	9.9*	6.5	7.8*					5.0	5.5*	**7.4**
LC	10.5											6.7*	6.7*	**5.2**
	9.0					7.2*	7.2*					5.7*	5.7*	**7.1**
	7.5					7.3*	7.3*	6.2	6.9*			5.2	5.3*	**8.3**
	6.0					7.8*	7.8*	6.1	7.7*	4.5	5.6*	4.4	5.1*	**9.1**
	4.5	17.3*	17.3*	11.4*	11.4*	8.3	9.7*	5.9	8.3*	4.4	6.6	4.0	5.2*	**9.6**
	3.0			11.9	14.4*	7.8	10.8*	5.7	8.6	4.3	6.5	3.7	5.3*	**9.9**
	1.5			11.1	15.9*	7.4	11.6	5.4	8.3	4.2	6.3	3.6	5.5	**9.9**
	0	4.9*	4.9*	10.7	16.0*	7.1	11.3	5.3	8.1	4.1	6.2	3.7	5.6	**9.7**
	−1.5	9.0*	9.0*	10.6	15.0*	7.0	11.2	5.2	8.0	4.1	6.2	3.9	6.0	**9.2**
	−3.0	14.1*	14.1*	10.7	13.0*	7.0	10.2*	5.2	7.9*			4.5	6.3*	**8.5**
	−4.5	11.9*	11.9*	9.9*	9.9*	7.2	7.8*					5.5*	5.5*	**7.4**
LC-V	10.5											6.6*	6.6*	**5.2**
	9.0					7.3*	7.3*					5.7*	5.7*	**7.1**
	7.5					7.3*	7.3*	7.0*	7.0*			5.3*	5.3*	**8.3**
	6.0					7.9*	7.9*	7.5	7.8*	5.6	5.8*	5.1*	5.1*	**9.1**
	4.5	17.9*	17.9*	12.3*	12.3*	9.8*	9.8*	7.3	8.4*	5.5	7.3*	4.9	5.2*	**9.6**
	3.0			14.6*	14.6*	9.7	10.9*	7.0	8.9*	5.4	7.6*	4.7	5.3*	**9.9**
	1.5			14.1	16.0*	9.3	11.7*	6.8	9.3*	5.3	7.5	4.6	5.7*	**9.9**
	0	5.3*	5.3*	13.7	16.0*	9.0	11.9*	6.6	9.4*	5.2	7.4	4.7	6.2*	**9.7**
	−1.5	9.4*	9.4*	13.7	14.9*	8.9	11.4*	6.5	8.9*	5.2	6.9*	5.0	6.6*	**9.2**
	−3.0	14.7*	14.7*	12.8*	12.8*	8.9	10.0*	6.6	7.7*			5.7	6.2*	**8.5**
	−4.5	11.4*	11.4*	9.5*	9.5*	7.5*	7.5*					5.3*	5.3*	**7.4**

Height **Can be slewed through 360°** **In longitudinal position of undercarriage** **Max. reach** *** Limited by hydr. capacity**

The load values are quoted in tons (t) at stick end (without bucket), and may be swung 360° on firm and even ground. Adjacent values are valid for the undercarriage when in the longitudinal position. Capacities are valid for 600 mm wide track pads. Indicated loads are based on ISO 10567 standard and do not exceed 75 % of tipping or 87 % of hydraulic capacity (indicated via *). Without bucket cylinder, link and lever the lift capacities will increase by 410 kg. Lifting capacity of the excavator is limited by machine stability and hydraulic capacity.
According to European Standard, EN 474-5: In the European Union excavators have to be equipped with an overload warning device, a load diagram and automatic safety check valves on hoist cylinders and stick cylinder(s), when they are used for lifting operations which require the use of lifting accessories.

Lift Capacities

with Two-Piece Boom 6.40 m, Counterweight 5.1 t and Track Pads 600 mm

Stick 2.50 m

Under-carriage	m	3.0 m		4.5 m		6.0 m		7.5 m		9.0 m				m
NLC	10.5													
	9.0			11.3*	11.3*							9.1	9.5*	**5.2**
	7.5			11.4*	11.4*	7.5	10.9*					5.9	8.4*	**6.8**
	6.0	13.6*	13.6*	11.6	13.3*	7.6	11.1*	5.0	8.2			4.7	7.7	**7.8**
	4.5	20.5	20.9*	11.3	15.3*	7.4	11.5	5.0	8.2			4.0	6.7	**8.4**
	3.0	19.9	20.9*	10.7	16.4*	7.0	11.3	4.9	8.1			3.7	6.3	**8.6**
	1.5	13.5*	13.5*	9.9	16.3*	6.6	11.3	4.7	7.8			3.6	6.1	**8.7**
	0	17.5	19.1*	9.3	16.4*	6.3	10.9	4.5	7.6			3.7	6.4	**8.4**
	−1.5	17.5	24.0*	9.1	16.3*	6.1	10.7	4.4	7.5			4.1	6.0*	**7.9**
	−3.0	17.7	21.3*	9.2	14.8*	6.0	9.4*					4.4*	4.4*	**7.0**
	−4.5	13.6*	13.6*	7.2*	7.2*							6.0*	6.0*	**4.8**
LC	10.5													
	9.0			11.3*	11.3*							9.5*	9.5*	**5.2**
	7.5			11.4*	11.4*	8.2	10.9*					6.5	8.4*	**6.8**
	6.0	13.6*	13.6*	12.6	13.3*	8.3	11.1*	5.5	8.3			5.1	7.8	**7.8**
	4.5	20.9*	20.9*	12.2	15.3*	8.1	11.6	5.5	8.3			4.5	6.8	**8.4**
	3.0	20.9*	20.9*	11.9	16.4*	7.7	11.4	5.4	8.2			4.1	6.3	**8.6**
	1.5	13.5*	13.5*	11.0	16.3*	7.3	11.3	5.1	7.9			4.0	6.2	**8.7**
	0	19.1*	19.1*	10.4	16.4*	6.9	11.0	5.0	7.7			4.1	6.4	**8.4**
	−1.5	20.1	24.0*	10.2	16.3*	6.8	10.8	4.8	7.6			4.5	6.0*	**7.9**
	−3.0	20.3	21.3*	10.3	14.8*	6.7	9.4*					4.4*	4.4*	**7.0**
	−4.5	13.6*	13.6*	7.2*	7.2*							6.0*	6.0*	**4.8**
LC-V	10.5													
	9.0			11.3*	11.3*							9.3*	9.3*	**5.2**
	7.5			11.5*	11.5*	10.0	10.9*					7.8	8.4*	**6.8**
	6.0	15.0*	15.0*	13.7*	13.7*	9.9	11.1*	6.9	9.5*			6.3	8.1*	**7.8**
	4.5	20.7*	20.7*	14.6	15.5*	9.8	11.7*	6.8	9.6*			5.6	8.0	**8.4**
	3.0	20.3*	20.3*	14.3	16.4*	9.6	12.1*	6.7	9.5			5.2	7.6	**8.6**
	1.5	13.8*	13.8*	13.9	16.3*	9.1	12.1*	6.5	9.4			5.1	7.5	**8.7**
	0	19.8*	19.8*	13.4	16.4*	8.8	12.1*	6.3	9.2			5.3	6.9*	**8.4**
	−1.5	23.8*	23.8*	13.2	16.3*	8.6	12.0*	6.2	7.7*			5.9	5.9*	**7.9**
	−3.0	21.0*	21.0*	13.3	14.6*	8.5	8.9*					4.2*	4.2*	**7.0**
	−4.5	12.1*	12.1*									6.8*	6.8*	**4.8**

Stick 2.80 m

Under-carriage	m	3.0 m		4.5 m		6.0 m		7.5 m		9.0 m				m
NLC	10.5													
	9.0			10.2*	10.2*							8.0	8.2*	**5.7**
	7.5			10.0*	10.0*	7.6	9.9*					5.5	7.4*	**7.1**
	6.0	10.1*	10.1*	11.6*	11.6*	7.7	10.8*	5.1	8.3			4.4	7.1*	**8.1**
	4.5	20.6	21.5*	11.3	14.9*	7.5	11.4*	5.1	8.3			3.8	6.4	**8.6**
	3.0	20.0*	20.7*	10.9	16.2*	7.1	11.3	4.9	8.1			3.5	5.9	**8.9**
	1.5	16.2*	16.2*	10.0	16.2*	6.6	11.2	4.7	7.9			3.4	5.8	**9.0**
	0	17.5	19.1*	9.4	16.3*	6.3	10.9	4.5	7.6			3.5	6.0	**8.7**
	−1.5	17.3	24.4*	9.1	16.3*	6.1	10.7	4.3	7.5			3.8	6.0*	**8.2**
	−3.0	17.5	22.1*	9.1	15.2*	5.9	10.3*					4.5	4.6*	**7.4**
	−4.5	16.2*	16.2*	9.2	9.4*							5.0*	5.0*	**5.5**
LC	10.5													
	9.0			10.2*	10.2*							8.2*	8.2*	**5.7**
	7.5			10.0*	10.0*	8.3	9.9*					6.0	7.4*	**7.1**
	6.0	10.1*	10.1*	11.6*	11.6*	8.3	10.8*	5.6	8.4			4.8	7.1*	**8.1**
	4.5	21.5*	21.5*	12.2	14.9*	8.2	11.4*	5.6	8.4			4.2	6.4	**8.6**
	3.0	20.7*	20.7*	12.0	16.2*	7.8	11.4	5.4	8.2			3.9	6.0	**8.9**
	1.5	16.2*	16.2*	11.1	16.2*	7.3	11.3	5.2	8.0			3.8	5.9	**9.0**
	0	19.1*	19.1*	10.4	16.3*	6.9	11.0	5.0	7.7			3.9	6.1	**8.7**
	−1.5	19.9	24.4*	10.2	16.3*	6.7	10.8	4.8	7.6			4.2	6.0*	**8.2**
	−3.0	20.1	22.1*	10.2	15.2*	6.6	10.3*					4.6*	4.6*	**7.4**
	−4.5	16.2*	16.2*	9.4*	9.4*							5.0*	5.0*	**5.5**
LC-V	10.5											10.6*	10.6*	
	9.0			10.1*	10.1*							8.1*	8.1*	**5.7**
	7.5			10.0*	10.0*	10.0*	10.0*					7.3	7.4*	**7.1**
	6.0	10.9*	10.9*	11.9*	11.9*	9.9	10.9*	7.0	9.3*			6.0	7.1*	**8.1**
	4.5	21.3*	21.3*	14.6	15.1*	9.7	11.5*	6.9	9.4*			5.3	7.1*	**8.6**
	3.0	20.8*	20.8*	14.3	16.3*	9.6	12.0*	6.8	9.4			5.0	7.2	**8.9**
	1.5	16.2*	16.2*	14.0	16.2*	9.2	12.0*	6.5	9.4			4.9	7.1	**9.0**
	0	19.6*	19.6*	13.4	16.3*	8.8	12.0*	6.3	9.2			5.0	6.7*	**8.7**
	−1.5	24.3*	24.3*	13.1	16.3*	8.6	12.1*	6.2	8.5*			5.5	5.9*	**8.2**
	−3.0	21.8*	21.8*	13.2	15.0*	8.5	10.0*					4.4*	4.4*	**7.4**
	−4.5	15.0*	15.0*	8.5*	8.5*							5.3*	5.3*	**5.5**

Height **Can be slewed through 360°** **In longitudinal position of undercarriage** **Max. reach** *** Limited by hydr. capacity**

The load values are quoted in tons (t) at stick end (without bucket), and may be swung 360° on firm and even ground. Adjacent values are valid for the undercarriage when in the longitudinal position. Capacities are valid for 600 mm wide track pads with adjusting cylinder in optimal position. Indicated loads are based on ISO 10567 standard and do not exceed 75 % of tipping or 87 % of hydraulic capacity (indicated via *). Without bucket cylinder, link and lever the lift capacities will increase by 410 kg. Lifting capacity of the excavator is limited by machine stability and hydraulic capacity.
According to European Standard, EN 474-5: In the European Union excavators have to be equipped with an overload warning device, a load diagram and automatic safety check valves on hoist cylinders and stick cylinder(s), when they are used for lifting operations which require the use of lifting accessories.

Stick 3.20 m

Under-carriage	m	3.0 m		4.5 m		6.0 m		7.5 m		9.0 m				m
NLC	10.5											8.8*	8.8*	4.0
	9.0			8.8*	8.8*	7.4	7.7*					6.9	7.0*	6.3
	7.5			8.3*	8.3*	7.7	8.6*	5.1	6.8*			4.9	6.3*	7.6
	6.0			9.4*	9.4*	7.7	9.5*	5.2	8.3			4.0	6.1*	8.5
	4.5	20.9	21.4*	11.3	14.3*	7.6	11.1*	5.2	8.3	3.6	6.0	3.5	5.9	9.0
	3.0	20.0	20.7*	11.1*	15.9*	7.2	11.2	5.0	8.2	3.5	5.9	3.3	5.6	9.3
	1.5	18.7	19.7*	10.1	16.2*	6.7	11.1	4.8	8.0	3.4	5.8	3.2	5.5	9.3
	0	17.6	19.3*	9.4	16.1*	6.3	10.9	4.5	7.7	3.3	5.7	3.3	5.6	9.1
	−1.5	17.2	24.0*	9.0	16.3*	6.0	10.7	4.3	7.5			3.5	5.8*	8.6
	−3.0	17.3	23.0*	9.0	15.6*	5.9	10.5	4.3	6.4*			4.1	4.7*	7.8
	−4.5	17.8	18.7*	9.1	11.7*	5.9*	5.9*					4.1*	4.1*	6.3
LC	10.5											8.8*	8.8*	4.0
	9.0			8.8*	8.8*	7.7*	7.7*					7.0*	7.0*	6.3
	7.5			8.3*	8.3*	8.3	8.6*	5.6	6.8*			5.4	6.3*	7.6
	6.0			9.4*	9.4*	8.3	9.5*	5.7	8.4			4.4	6.1*	8.5
	4.5	21.4*	21.4*	12.3	14.3*	8.2	11.1*	5.7	8.4	3.9	6.0	3.9	6.0	9.0
	3.0	20.7*	20.7*	11.9	15.9*	7.8	11.3	5.5	8.3	3.9	6.0	3.6	5.6	9.3
	1.5	19.7*	19.7*	11.2	16.2*	7.3	11.2	5.3	8.1	3.8	5.9	3.5	5.5	9.3
	0	19.3*	19.3*	10.5	16.1*	6.9	11.1	5.0	7.8	3.7	5.8	3.6	5.7	9.1
	−1.5	19.8	24.0*	10.1	16.3*	6.7	10.8	4.8	7.5			3.9	5.8*	8.6
	−3.0	19.9	23.0*	10.0	15.6*	6.6	10.6	4.7	6.4*			4.5	4.7*	7.8
	−4.5	18.7*	18.7*	10.1	11.7*	5.9*	5.9*					4.1*	4.1*	6.3
LC-V	10.5											8.5*	8.5*	4.0
	9.0			8.7*	8.7*	8.0*	8.0*					6.9*	6.9*	6.3
	7.5			8.3*	8.3*	8.7*	8.7*	6.9	7.1*			6.3*	6.3*	7.6
	6.0			9.7*	9.7*	9.7*	9.7*	7.1	8.9*			5.5	6.1*	8.5
	4.5	21.5*	21.5*	14.5*	14.5*	9.7	11.2*	7.0	9.3*	5.0	6.5*	4.9	6.1*	9.0
	3.0	20.7*	20.7*	14.3	16.0*	9.6	11.8*	6.9	9.4	4.9	7.1	4.6	6.3*	9.3
	1.5	19.2*	19.2*	14.1	16.2*	9.2	12.0*	6.6	9.3	4.8	7.0	4.6	6.6	9.3
	0	19.6*	19.6*	13.5	16.1*	8.8	11.9*	6.3	9.3	4.7	6.8*	4.7	6.5*	9.1
	−1.5	24.6*	24.6*	13.1	16.3*	8.6	12.0*	6.1	9.0*			5.1	5.8*	8.6
	−3.0	22.7*	22.7*	13.0	15.5*	8.4	10.9*	5.9*	5.9*			4.6*	4.6*	7.8
	−4.5	18.1*	18.1*	11.0*	11.0*	5.0*	5.0*					4.3*	4.3*	6.3

Stick 3.70 m

Under-carriage	m	3.0 m		4.5 m		6.0 m		7.5 m		9.0 m				m
NLC	10.5			7.7*	7.7*							6.9*	6.9*	4.9
	9.0					7.2*	7.2*					5.8*	5.8*	6.9
	7.5					7.3*	7.3*	5.3	6.8*			4.4	5.3*	8.1
	6.0			7.3*	7.3*	7.7	8.0*	5.4	7.6*			3.7	5.1*	9.0
	4.5	13.8*	13.8*	11.2*	11.2*	7.5	10.0*	5.3	8.3	3.7	6.1	3.3	5.2*	9.5
	3.0	20.1	21.0*	11.1	15.4*	7.3	11.2	5.1	8.2	3.6	6.0	3.0	5.2	9.7
	1.5	19.4	21.6*	10.3	16.1*	6.8	11.1	4.8	8.0	3.5	5.8	2.9	5.1	9.8
	0	17.8	20.2*	9.5	16.0*	6.3	11.0	4.6	7.8	3.3	5.7	3.0	5.2	9.6
	−1.5	17.2	22.7*	9.0	16.1*	6.0	10.7	4.3	7.5	3.2	5.6	3.2	5.5	9.1
	−3.0	17.1	23.8*	8.9	15.9*	5.9	10.5	4.2	7.3			3.6	4.8*	8.3
	−4.5	17.5	20.6*	9.0	13.7*	5.8	8.4*					3.5*	3.5*	7.2
LC	10.5			7.7*	7.7*							6.9*	6.9*	4.9
	9.0					7.2*	7.2*					5.8*	5.8*	6.9
	7.5					7.3*	7.3*	5.8	6.8*			4.9	5.3*	8.1
	6.0			7.3*	7.3*	8.0*	8.0*	5.8	7.6*			4.1	5.1*	9.0
	4.5	13.8*	13.8*	11.2*	11.2*	8.2	10.0*	5.8	8.4	4.0	6.1	3.6	5.2*	9.5
	3.0	21.0*	21.0*	11.9	15.4*	8.0	11.3	5.6	8.2	4.0	6.0	3.4	5.2	9.7
	1.5	21.6*	21.6*	11.4	16.1*	7.4	11.1	5.3	8.1	3.8	5.9	3.3	5.1	9.8
	0	20.2*	20.2*	10.6	16.0*	7.0	11.1	5.1	7.9	3.7	5.8	3.3	5.2	9.6
	−1.5	19.8	22.7*	10.1	16.1*	6.7	10.8	4.8	7.6	3.6	5.7	3.6	5.6	9.1
	−3.0	19.7	23.8*	9.9	15.9*	6.5	10.6	4.7	7.4			4.0	4.8*	8.3
	−4.5	20.1	20.6*	10.0	13.7*	6.5	8.4*					3.5*	3.5*	7.2
LC-V	10.5			7.8*	7.8*							6.7*	6.7*	4.9
	9.0					7.2*	7.2*					5.7*	5.7*	6.9
	7.5					7.4*	7.4*	6.9*	6.9*			5.3*	5.3*	8.1
	6.0			7.5*	7.5*	8.1*	8.1*	7.1	7.7*	5.1	5.3*	5.1	5.1*	9.0
	4.5	18.6*	18.6*	12.0*	12.0*	9.7	10.3*	7.1	9.0*	5.1	7.0*	4.6	5.2*	9.5
	3.0	21.0*	21.0*	14.3	15.5*	9.5	11.5*	6.9	9.3*	5.0	7.2	4.3	5.3*	9.7
	1.5	21.7*	21.7*	14.1	16.1*	9.3	11.9*	6.7	9.3	4.9	7.1	4.2	5.7*	9.8
	0	20.2*	20.2*	13.6	16.0*	8.8	11.8*	6.4	9.3	4.7	6.9	4.3	6.2*	9.6
	−1.5	23.1*	23.1*	13.1	16.1*	8.5	11.9*	6.1	9.1	4.7	5.9*	4.6	5.7*	9.1
	−3.0	23.6*	23.6*	12.9	15.8*	8.4	11.6*	6.0	7.7*			4.7*	4.7*	8.3
	−4.5	20.1*	20.1*	13.0	13.2*	7.9*	7.9*					3.6*	3.6*	7.2

Height **Can be slewed through 360°** **In longitudinal position of undercarriage** **Max. reach** *** Limited by hydr. capacity**

The load values are quoted in tons (t) at stick end (without bucket), and may be swung 360° on firm and even ground. Adjacent values are valid for the undercarriage when in the longitudinal position. Capacities are valid for 600 mm wide track pads with adjusting cylinder in optimal position. Indicated loads are based on ISO 10567 standard and do not exceed 75 % of tipping or 87 % of hydraulic capacity (indicated via *). Without bucket cylinder, link and lever the lift capacities will increase by 410 kg. Lifting capacity of the excavator is limited by machine stability and hydraulic capacity.
According to European Standard, EN 474-5: In the European Union excavators have to be equipped with an overload warning device, a load diagram and automatic safety check valves on hoist cylinders and stick cylinder(s), when they are used for lifting operations which require the use of lifting accessories.

Lift Capacities

with Two-Piece Boom 6.40 m, Counterweight 6.2 t and Track Pads 600 mm

Stick 2.50 m

Under-carriage	m	3.0 m		4.5 m		6.0 m		7.5 m		9.0 m				m
NLC	10.5													
	9.0			11.3*	11.3*							9.5*	9.5*	**5.2**
	7.5			11.4*	11.4*	8.2	10.9*					6.5	8.4*	**6.8**
	6.0	13.6*	13.6*	12.5	13.3*	8.3	11.1*	5.6	8.9			5.2	8.1*	**7.8**
	4.5	20.9*	20.9*	12.2	15.3*	8.2	11.7*	5.6	8.9			4.5	7.3	**8.4**
	3.0	20.9*	20.9*	11.8	16.4*	7.7	12.0	5.4	8.8			4.2	6.9	**8.6**
	1.5	13.5*	13.5*	10.9	16.3*	7.3	11.9	5.2	8.6			4.1	6.7	**8.7**
	0	19.1*	19.1*	10.4	16.4*	7.0	11.9	5.0	8.3			4.2	7.0	**8.4**
	−1.5	19.4	24.0*	10.2	16.3*	6.8	11.7	4.9	8.0*			4.6	6.0*	**7.9**
	−3.0	19.7	21.3*	10.2	14.8*	6.7	9.4*					4.4*	4.4*	**7.0**
	−4.5	13.6*	13.6*	7.2*	7.2*							6.0*	6.0*	**4.8**
LC	10.5													
	9.0			11.3*	11.3*							9.5*	9.5*	**5.2**
	7.5			11.4*	11.4*	8.9	10.9*					7.1	8.4*	**6.8**
	6.0	13.6*	13.6*	13.3*	13.3*	9.0	11.1*	6.1	9.0			5.7	8.1*	**7.8**
	4.5	20.9*	20.9*	13.1	15.3*	8.9	11.7*	6.1	9.0			4.9	7.4	**8.4**
	3.0	20.9*	20.9*	12.9	16.4*	8.5	12.1	5.9	8.9			4.6	6.9	**8.6**
	1.5	13.5*	13.5*	12.1	16.3*	8.0	12.0	5.7	8.7			4.5	6.8	**8.7**
	0	19.1*	19.1*	11.5	16.4*	7.7	12.0	5.5	8.4			4.6	7.0*	**8.4**
	−1.5	22.2	24.0*	11.3	16.3*	7.5	11.8	5.4	8.0*			5.1	6.0*	**7.9**
	−3.0	21.3*	21.3*	11.4	14.8*	7.4	9.4*					4.4*	4.4*	**7.0**
	−4.5	13.6*	13.6*	7.2*	7.2*							6.0*	6.0*	**4.8**
LC-V	10.5													
	9.0			11.3*	11.3*							9.3*	9.3*	**5.2**
	7.5			11.5*	11.5*	10.7	10.9*					8.4*	8.4*	**6.8**
	6.0	15.0*	15.0*	13.7*	13.7*	10.6	11.1*	7.5	9.5*			6.9	8.1*	**7.8**
	4.5	20.7*	20.7*	15.5*	15.5*	10.4	11.7*	7.5	9.6*			6.1	8.1*	**8.4**
	3.0	20.3*	20.3*	15.2	16.4*	10.3	12.1*	7.3	9.6*			5.7	8.1*	**8.6**
	1.5	13.8*	13.8*	15.2	16.3*	9.9	12.1*	7.1	9.6*			5.6	7.6*	**8.7**
	0	19.8*	19.8*	14.6	16.4*	9.6	12.1*	6.9	9.5*			5.8	6.9*	**8.4**
	−1.5	23.8*	23.8*	14.4	16.3*	9.4	12.0*	6.8	7.7*			5.9*	5.9*	**7.9**
	−3.0	21.0*	21.0*	14.5	14.6*	8.9*	8.9*					4.2*	4.2*	**7.0**
	−4.5	12.1*	12.1*									6.8*	6.8*	**4.8**

Stick 2.80 m

Under-carriage	m	3.0 m		4.5 m		6.0 m		7.5 m		9.0 m				m
NLC	10.5													
	9.0			10.2*	10.2*							8.2*	8.2*	**5.7**
	7.5			10.0*	10.0*	8.3	9.9*					6.0	7.4*	**7.1**
	6.0	10.1*	10.1*	11.6*	11.6*	8.4	10.8*	5.6	9.0			4.9	7.1*	**8.1**
	4.5	21.5*	21.5*	12.2	14.9*	8.2	11.4*	5.6	8.9			4.3	7.0	**8.6**
	3.0	20.7*	20.7*	11.9	16.2*	7.8	12.0	5.5	8.8			4.0	6.5	**8.9**
	1.5	16.2*	16.2*	11.0	16.2*	7.3	11.8	5.3	8.6			3.9	6.4	**9.0**
	0	19.1*	19.1*	10.4	16.3*	7.0	11.9	5.0	8.4			4.0	6.6	**8.7**
	−1.5	19.3	24.4*	10.1	16.3*	6.8	11.7	4.9	8.2			4.3	6.0*	**8.2**
	−3.0	19.5	22.1*	10.1	15.2*	6.7	10.3*					4.6*	4.6*	**7.4**
	−4.5	16.2*	16.2*	9.4*	9.4*							5.0*	5.0*	**5.5**
LC	10.5													
	9.0			10.2*	10.2*							8.2*	8.2*	**5.7**
	7.5			10.0*	10.0*	9.0	9.9*					6.6	7.4*	**7.1**
	6.0	10.1*	10.1*	11.6*	11.6*	9.0	10.8*	6.2	9.1			5.3	7.1*	**8.1**
	4.5	21.5*	21.5*	13.1	14.9*	8.8	11.4*	6.1	9.0			4.7	7.0	**8.6**
	3.0	20.7*	20.7*	12.8	16.2*	8.5	12.0*	6.0	8.9			4.4	6.6	**8.9**
	1.5	16.2*	16.2*	12.2	16.2*	8.0	11.9	5.8	8.7			4.3	6.5	**9.0**
	0	19.1*	19.1*	11.5	16.3*	7.7	11.9	5.5	8.5			4.4	6.7	**8.7**
	−1.5	22.1	24.4*	11.3	16.3*	7.5	11.8	5.4	8.3			4.8	6.0*	**8.2**
	−3.0	22.1*	22.1*	11.3	15.2*	7.4	10.3*					4.6*	4.6*	**7.4**
	−4.5	16.2*	16.2*	9.4*	9.4*							5.0*	5.0*	**5.5**
LC-V	10.5											10.6*	10.6*	
	9.0			10.1*	10.1*							8.1*	8.1*	**5.7**
	7.5			10.0*	10.0*	10.0*	10.0*					7.4*	7.4*	**7.1**
	6.0	10.9*	10.9*	11.9*	11.9*	10.6	10.9*	7.6	9.3*			6.5	7.1*	**8.1**
	4.5	21.3*	21.3*	15.1*	15.1*	10.4	11.5*	7.5	9.4*			5.8	7.1*	**8.6**
	3.0	20.8*	20.8*	15.2	16.3*	10.3	12.0*	7.4	9.6*			5.4	7.4*	**8.9**
	1.5	16.2*	16.2*	15.1	16.2*	10.0	12.0*	7.1	9.5*			5.4	7.3*	**9.0**
	0	19.6*	19.6*	14.6	16.3*	9.6	12.0*	6.9	9.5*			5.5	6.7*	**8.7**
	−1.5	24.3*	24.3*	14.4	16.3*	9.4	12.1*	6.8	8.5*			5.9*	5.9*	**8.2**
	−3.0	21.8*	21.8*	14.4	15.0*	9.3	10.0*					4.4*	4.4*	**7.4**
	−4.5	15.0*	15.0*	8.5*	8.5*							5.3*	5.3*	**5.5**

Height **Can be slewed through 360°** **In longitudinal position of undercarriage** **Max. reach** *** Limited by hydr. capacity**

The load values are quoted in tons (t) at stick end (without bucket), and may be swung 360° on firm and even ground. Adjacent values are valid for the undercarriage when in the longitudinal position. Capacities are valid for 600 mm wide track pads with adjusting cylinder in optimal position. Indicated loads are based on ISO 10567 standard and do not exceed 75 % of tipping or 87 % of hydraulic capacity (indicated via *). Without bucket cylinder, link and lever the lift capacities will increase by 410 kg. Lifting capacity of the excavator is limited by machine stability and hydraulic capacity.
According to European Standard, EN 474-5: In the European Union excavators have to be equipped with an overload warning device, a load diagram and automatic safety check valves on hoist cylinders and stick cylinder(s), when they are used for lifting operations which require the use of lifting accessories.

Stick 3.20 m

Under-carriage	m	3.0 m		4.5 m		6.0 m		7.5 m		9.0 m				m
NLC	10.5											8.8*	8.8*	4.0
	9.0			8.8*	8.8*	7.7*	7.7*					7.0*	7.0*	6.3
	7.5			8.3*	8.3*	8.4	8.6*	5.6	6.8*			5.5	6.3*	7.6
	6.0			9.4*	9.4*	8.4	9.5*	5.8	8.7*			4.5	6.1*	8.5
	4.5	21.4*	21.4*	12.2	14.3*	8.2	11.1*	5.7	8.9	4.0	6.3*	4.0	6.1*	9.0
	3.0	20.7*	20.7*	11.9	15.9*	7.9	11.8*	5.6	8.8	4.0	6.5	3.7	6.1	9.3
	1.5	19.7*	19.7*	11.1	16.2*	7.4	11.8	5.3	8.7	3.9	6.4	3.6	6.0	9.3
	0	19.3*	19.3*	10.4	16.1*	7.0	11.8	5.1	8.4	3.8	6.3	3.7	6.2	9.1
	−1.5	19.2	24.0*	10.1	16.3*	6.8	11.6	4.9	8.2			4.0	5.8*	8.6
	−3.0	19.3	23.0*	10.0	15.6*	6.6	11.1*	4.8	6.4*			4.6	4.7*	7.8
	−4.5	18.7*	18.7*	10.1	11.7*	5.9*	5.9*					4.1*	4.1*	6.3
LC	10.5											8.8*	8.8*	4.0
	9.0			8.8*	8.8*	7.7*	7.7*					7.0*	7.0*	6.3
	7.5			8.3*	8.3*	8.6*	8.6*	6.1	6.8*			6.0	6.3*	7.6
	6.0			9.4*	9.4*	9.0	9.5*	6.3	8.7*			4.9	6.1*	8.5
	4.5	21.4*	21.4*	13.2	14.3*	8.8	11.1*	6.2	8.9	4.4	6.3*	4.4	6.1*	9.0
	3.0	20.7*	20.7*	12.8	15.9*	8.6	11.8*	6.1	8.8	4.3	6.5	4.1	6.2	9.3
	1.5	19.7*	19.7*	12.3	16.2*	8.1	11.8	5.8	8.8	4.2	6.4	4.0	6.1	9.3
	0	19.3*	19.3*	11.6	16.1*	7.7	11.8	5.6	8.5	4.1	6.3	4.1	6.2	9.1
	−1.5	22.0	24.0*	11.2	16.3*	7.4	11.8	5.4	8.3			4.4	5.8*	8.6
	−3.0	22.1	23.0*	11.2	15.6*	7.3	11.1*	5.3	6.4*			4.7*	4.7*	7.8
	−4.5	18.7*	18.7*	11.3	11.7*	5.9*	5.9*					4.1*	4.1*	6.3
LC-V	10.5											8.5*	8.5*	4.0
	9.0			8.7*	8.7*	8.0*	8.0*					6.9*	6.9*	6.3
	7.5			8.3*	8.3*	8.7*	8.7*	7.1*	7.1*			6.3*	6.3*	7.6
	6.0			9.7*	9.7*	9.7*	9.7*	7.6	8.9*			6.0	6.1*	8.5
	4.5	21.5*	21.5*	14.5*	14.5*	10.4	11.2*	7.6	9.3*	5.5	6.5*	5.4	6.1*	9.0
	3.0	20.7*	20.7*	15.1	16.0*	10.2	11.8*	7.4	9.5*	5.4	7.7	5.1	6.3*	9.3
	1.5	19.2*	19.2*	15.0	16.2*	10.0	12.0*	7.2	9.4*	5.3	7.6	5.0	6.7*	9.3
	0	19.6*	19.6*	14.7	16.1*	9.6	11.9*	6.9	9.4*	5.2	6.8*	5.2	6.5*	9.1
	−1.5	24.6*	24.6*	14.3	16.3*	9.4	12.0*	6.7	9.0*			5.6	5.8*	8.6
	−3.0	22.7*	22.7*	14.3	15.5*	9.2	10.9*	5.9*	5.9*			4.6*	4.6*	7.8
	−4.5	18.1*	18.1*	11.0*	11.0*	5.0*	5.0*					4.3*	4.3*	6.3

Stick 3.70 m

Under-carriage	m	3.0 m		4.5 m		6.0 m		7.5 m		9.0 m				m
NLC	10.5			7.7*	7.7*							6.9*	6.9*	4.9
	9.0					7.2*	7.2*					5.8*	5.8*	6.9
	7.5					7.3*	7.3*	5.8	6.8*			4.9	5.3*	8.1
	6.0			7.3*	7.3*	8.0*	8.0*	5.9	7.6*			4.1	5.1*	9.0
	4.5	13.8*	13.8*	11.2*	11.2*	8.2	10.0*	5.8	8.9	4.1	6.6	3.7	5.2*	9.5
	3.0	21.0*	21.0*	11.9	15.4*	8.0	11.5*	5.6	8.7	4.0	6.5	3.4	5.3*	9.7
	1.5	21.2	21.6*	11.4	16.1*	7.5	11.7	5.4	8.7	3.9	6.4	3.3	5.6	9.8
	0	19.8	20.2*	10.6	16.0*	7.0	11.7	5.1	8.5	3.8	6.3	3.4	5.7	9.6
	−1.5	19.2	22.7*	10.1	16.1*	6.7	11.6	4.9	8.2	3.7	6.1*	3.6	5.7*	9.1
	−3.0	19.1	23.8*	9.9	15.9*	6.6	11.5	4.7	8.0*			4.1	4.8*	8.3
	−4.5	19.4	20.6*	10.0	13.7*	6.5	8.4*					3.5*	3.5*	7.2
LC	10.5			7.7*	7.7*							6.9*	6.9*	4.9
	9.0					7.2*	7.2*					5.8*	5.8*	6.9
	7.5					7.3*	7.3*	6.3	6.8*			5.3*	5.3*	8.1
	6.0			7.3*	7.3*	8.0*	8.0*	6.4	7.6*			4.5	5.1*	9.0
	4.5	13.8*	13.8*	11.2*	11.2*	8.8	10.0*	6.3	8.9*	4.5	6.7	4.0	5.2*	9.5
	3.0	21.0*	21.0*	12.8	15.4*	8.6	11.5*	6.2	8.8	4.4	6.6	3.8	5.3*	9.7
	1.5	21.6*	21.6*	12.6	16.1*	8.2	11.8	5.9	8.7	4.3	6.5	3.7	5.6*	9.8
	0	20.2*	20.2*	11.7	16.0*	7.7	11.7	5.6	8.6	4.1	6.3	3.8	5.8	9.6
	−1.5	22.0	22.7*	11.2	16.1*	7.4	11.8	5.4	8.3	4.1	6.1*	4.0	5.7*	9.1
	−3.0	21.9	23.8*	11.1	15.9*	7.3	11.6	5.2	8.0*			4.5	4.8*	8.3
	−4.5	20.6*	20.6*	11.1	13.7*	7.2	8.4*					3.5*	3.5*	7.2
LC-V	10.5			7.8*	7.8*							6.7*	6.7*	4.9
	9.0					7.2*	7.2*					5.7*	5.7*	6.9
	7.5					7.4*	7.4*	6.9*	6.9*			5.3*	5.3*	8.1
	6.0			7.5*	7.5*	8.1*	8.1*	7.6	7.7*	5.3*	5.3*	5.1*	5.1*	9.0
	4.5	18.6*	18.6*	12.0*	12.0*	10.3*	10.3*	7.6	9.0*	5.6	7.0*	5.0	5.2*	9.5
	3.0	21.0*	21.0*	15.2	15.5*	10.2	11.5*	7.5	9.3*	5.5	7.7	4.7	5.3*	9.7
	1.5	21.7*	21.7*	14.9	16.1*	10.1	11.9*	7.3	9.4*	5.4	7.6	4.7	5.7*	9.8
	0	20.2*	20.2*	14.8	16.0*	9.6	11.8*	7.0	9.3*	5.2	7.4*	4.8	6.2*	9.6
	−1.5	23.1*	23.1*	14.3	16.1*	9.3	11.9*	6.7	9.3*	5.1	5.9*	5.1	5.7*	9.1
	−3.0	23.6*	23.6*	14.2	15.8*	9.2	11.6*	6.6	7.7*			4.7*	4.7*	8.3
	−4.5	20.1*	20.1*	13.2*	13.2*	7.9*	7.9*					3.6*	3.6*	7.2

Height **Can be slewed through 360°** **In longitudinal position of undercarriage** **Max. reach** *** Limited by hydr. capacity**

The load values are quoted in tons (t) at stick end (without bucket), and may be swung 360° on firm and even ground. Adjacent values are valid for the undercarriage when in the longitudinal position. Capacities are valid for 600 mm wide track pads with adjusting cylinder in optimal position. Indicated loads are based on ISO 10567 standard and do not exceed 75 % of tipping or 87 % of hydraulic capacity (indicated via *). Without bucket cylinder, link and lever the lift capacities will increase by 410 kg. Lifting capacity of the excavator is limited by machine stability and hydraulic capacity.
According to European Standard, EN 474-5: In the European Union excavators have to be equipped with an overload warning device, a load diagram and automatic safety check valves on hoist cylinders and stick cylinder(s), when they are used for lifting operations which require the use of lifting accessories.

Available Attachments

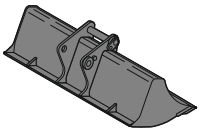

Rigid Ditch Cleaning Bucket

GRL 100, for mounting to quick coupler SWA 66				
Cutting width	mm	2,000	2,400	2,400
Capacity	m³	0.70	0.85	1.25
Weight	kg	546	635	685

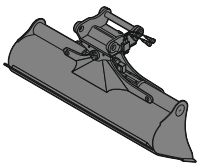

Tiltable Ditch Cleaning Bucket

GRL 100, 2 x 50° tiltable, for direct mounting						
Cutting width	mm	2,000	2,000	2,200	2,400	2,400
Capacity	m³	1.20	1.45	1.65	0.85	1.45
Weight	kg	1,520	1,600	1,680	1,475	1,620
GRL 100, 2 x 50° tiltable, for mounting to quick coupler SWA 66						
Cutting width	mm	2,000	2,000	2,200	2,400	2,400
Capacity	m³	1.20	1.45	1.65	0.85	1.45
Weight	kg	1,520	1,600	1,680	1,475	1,620

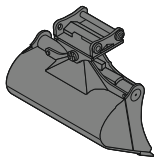

Tilt Bucket

SL 100, 2 x 50° tiltable, for mounting to quick coupler SWA 66					
Cutting width	mm	1,600	1,600	1,700	1,800
Capacity	m³	1.45	1.75	1.85	1.60
Weight	kg	1,520	1,635	1,695	1,620
HD-version				X	

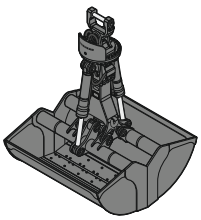

Clamshells

GM 20C, earthmoving shell, for mounting to quick coupler SWA 48					
Cutting width	mm	600	800	1,000	1,200
Capacity	m³	0.45	0.60	0.75	0.90
Weight	kg	1,080	1,130	1,205	1,270
GMZ 80, earthmoving shell, for mounting to quick coupler SWA 66					
Cutting width	mm	1,200	1,400		
Capacity	m³	1.40	1.60		
Weight	kg	2,376	2,486		

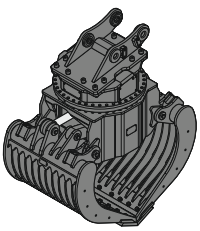

Sorting Grab

		perforated			ribbed			closed			stone tong
SG 30, for direct mounting											
Cutting width	mm	1,000	1,200	1,400	1,000	1,200	1,400	1,000	1,200	1,400	1,020
Capacity	m³	0.85	1.00	1.15	0.75	0.90	1.05	0.85	1.00	1.15	0.85
Weight	kg	1,700	1,570	1,850	1,775	1,885	1,990	1,730	1,810	1,890	1,765
SG 30, for mounting to quick coupler SWA 48											
Cutting width	mm	1,000	1,200	1,400	1,000	1,200	1,400	1,000	1,200	1,400	1,020
Capacity	m³	0.85	1.00	1.15	0.75	0.90	1.05	0.85	1.00	1.15	0.85
Weight	kg	1,700	1,570	1,850	1,775	1,885	1,990	1,730	1,810	1,890	1,765
SG 40, for mounting to quick coupler SWA 48 and SWA 66											
Cutting width	mm	1,100	1,300		1,100	1,300					
Capacity	m³	1.30	1.60		1.10	1.40					
Weight	kg	2,230	2,800		2,320	2,900					

Serial Equipment

Undercarriage

- Lashing eyes
- Sprocket with dirt ejector
- Track and carrier rollers, sealed and lifetime-lubricated

Uppercarriage

- Access platforms without protruding parts
- Anti-skid surfaces
- Automatic swing brake lock
- Centralised lubrication system (automatic)
- DEF tank filling indicator
- DEF tank lockable access hatch
- Engine coolant level, visible from the cab
- Engine hood with gas spring opening
- Filters accessible from ground level
- Handrails
- Hydraulic oil level, visible from ground level
- Lockable fuel tank cap
- Lockable service doors
- Lockable storage and accessories compartment
- Lockable storage box
- Main switch, electric, with timer
- Main switch, manual, lockable
- Protection grid on radiator fan
- Safe uppercarriage side access platform
- Sound insulation
- Swing drive gearbox oil level, visible from the cab
- Swing-out radiators
- Windshield washer fluid tank, accessible from ground level

Hydraulic System

- Dedicated swing circuit
- Filter with integrated fine filters
- Hydraulic pressure measuring ports
- Liebherr Positive Control system with 2 independent circuits
- Magnetic rod
- Pressure accumulator for controlled lowering of equipment with engine turned off

Engine

- Air filter with automatic dust ejector
- Automatic engine idling / speed increase, controlled via joystick sensors
- Common-Rail injection system
- Exhaust gas after-treatment system – DOC + DPF + SCR
- Fixed geometry turbocharger
- Fuel fine filter
- Fuel pre-filter and water separator
- Fuel priming pump
- Intercooler
- Power Pack EU Stage V
- Stepless adjustable engine speed

Operator's Cab

- 7" multifunction colour touchscreen
- Air conditioning, automatic, tri-zone, controlled via display
- Armrests adjustable in width, height and inclination
- Bottle holder
- Cab air filters housing, accessible from ground level
- Cab door sliding windows
- Cigarette lighter
- Coat hook
- DEF consumption on touchscreen
- DEF level on touchscreen
- Electric socket in cabin (12 V)
- Electric socket in cabin (24 V)
- Emergency hammer
- Engine oil level on touchscreen
- Fuel consumption on touchscreen
- Fuel level on touchscreen
- Hydraulic oil level on touchscreen
- Interior lighting
- Laminated right hand side window
- LiDAT Plus (Liebherr data transfer system) *
- Mechanical hour meters, visible from ground level
- Mobile phone storage net
- Movement priority between swing and boom, adjustable via touchscreen
- Movement priority for stick-in, adjustable via touchscreen
- Rain hood over front window opening
- Rearview mirror
- Rear view monitoring camera
- Rear window emergency exit
- Right hand side view monitoring camera
- Roll-down sun blinds for windscreen and roof window
- ROPS safety cab structure (ISO 12117-2)
- Rubber floor mat, fixed on floor and removable
- Shortkey button on joystick configurable
- Storage box
- Storage nets
- Storage spaces
- Swing braking torque adjustable via touchscreen
- Tiltable console left
- Tinted windows
- Visco-elastic damping
- Windscreen wiper and washer
- Work mode selector

Equipment

- Anti-drift system boom cylinders
- Anti-drift system stick cylinder
- Boom cylinders regeneration
- Pivot points made of cast steel
- SAE split flanges on high pressure lines
- Stick cylinder regeneration

* optionally extendable after one year

Equipment Standard / Option

Undercarriage

Chain guide 1 piece	•
Chain guide 2 pieces	+
Chain guide 3 pieces	+
Chain guide 4 pieces	+
Cover and base plate for undercarriage centre section	•
Reinforced cover and base plate for undercarriage centre section	+
Reinforced cover plate for centre section (LC-V undercarriage)	+
Screws protection for sideframe (LC-V undercarriage)	+
Special painting	+
Steps	•
Steps wide	+
Track pads triple grouser 600 mm	•
Track pads triple grouser 750 / 900 mm	+
Track pads triple grouser reinforced 600 mm	+
Tracks, sealed and greased	•
Tracks, sealed and greased, reinforced	+
Undercarriage LC	+
Undercarriage LC-V	+
Undercarriage NLC	+
Undercarriage storage compartment	+

Uppercarriage

Air pre-filter with cyclonical dust trap	+
Boxing ring	+
Counterweight heavy 6,2 t	+
Counterweight standard 5.1 t	•
Electric socket on uppercarriage (24 V)	+
Extended tool set including tool box	+
Fuel anti-theft protection	+
Headlight on uppercarriage, front left, LED+, 1 piece, protection included	+[1)]
Headlight on uppercarriage, front right, LED, 1 piece, protection included	•[1)]
Headlight on uppercarriage, front right, LED+, 1 piece, protection included	+[1)]
Headlight on uppercarriage, lateral left, LED+, 1 piece	+[1)]
Headlight on uppercarriage, lateral right, LED+, 1 piece	+[1)]
Headlights on uppercarriage, rear, LED+, 2 pieces	+[1)]
Lighting for tank area	+[1)]
Lighting for uppercarriage access	+[1)]
Pre-heating system for fuel	+
Radiator fine mesh protection grid	+
Reflective warning stickers	+
Reversible fan drive	+
Rotating beacons on uppercarriage, rear, LED, 2 pieces	+
Skyview 360°	+
Special painting	+
Tank refilling pump fuel	+
Tool set including storage case	•
Uppercarriage bottom and side protection	+
Uppercarriage bottom closure sheets	•

Hydraulic System

Bypass filter for hydraulic oil	+
Liebherr hydraulic oil	•
Liebherr hydraulic oil, adapted for extreme climate conditions	+
Liebherr hydraulic oil, biodegradable	+

Engine

Automatic engine shutdown after idling	+
Engine shut-down with overrun	+
Lighting for engine compartment	+[1)]

Operator's Cab

2" seat belt with retractor	•
3" seat belt with retractor, orange colour	+
4-points seat belt	+
Acoustic travel alarm deactivatable	+
Auxilary heater programmable	+
Bottom windscreen wiper	+
Cool box (12 V)	+
Dark tinted windows	+
Electrically adjustable and heated outside rear-view mirrors	+
Electronic immobiliser	+
Emergency stop in cab	+
FGPS front guard	+
FGPS front guard tiltable	+
Filter for hydraulic hammer return flow	+
Fire extinguisher	+
First-aid box	+
Footrest	+
FOPS top guard	+
FOPS top guard flat	+
Handrests elevated for joysticks	+
Headlights on cab, front, LED, 2 pieces	•[1)]
Headlights on cab, front, LED+, 2 pieces	+[1)]
Headlights on cab roof, front, LED+, 2 pieces	+[1)]
High pressure circuit bypass	+
High pressure circuit switchable on pedals or mini-joystick	+
High pressure circuit with Tool Control (20 attachment adjustments on display)	+
Impact resistant one-piece windscreen	+
Impact resistant roof window	+
Integral protection guard	+
Laminated roof window	•
Lightbar on cabin	+
Luminosity control (LED+ headlights)	+[1)]
Medium pressure circuit	+
Mini-joysticks proportional	+
Movement restriction for boom	+
Movement restriction for stick	+
Operator seat Comfort	•
Operator seat Premium	+
Overload warning system	+
Preparation for machine guidance system	+
Preparation for tiltrotator	+
Preparation for weighing system	+
Radio Comfort	+
Radio pre-installation	•
Retractable laminated two-piece windscreen	•
Roof sun shield	+
Roof window wiper	+
Rotating beacon on cabin, LED, 1 piece	+
Seat belt reminder	+
Special painting	+
Sun visor	+
Switch between high pressure and bucket cylinder controls	+
Windscreen bottom protection grid	+

Equipment

Boom bottom protection	+
Bucket cylinder rod protection	+
Centralised lubrication extended for connecting link	+
Floating boom	+
Headlight guard on boom, right	+
Headlight guards on boom, right and left	+
Headlight on boom, left, LED+, 1 piece	+[1)]
Headlight on boom, right, LED, 1 piece	•[1)]
Headlight on boom, right, LED+, 1 piece	+[1)]
Headlight on stick, bottom, LED+, 1 piece	+[1)]
LIKUFIX electric signal plug	+
LIKUFIX for quick coupler SWA 48 hydraulic	+
LIKUFIX for quick coupler SWA 66 hydraulic	+
Load holding valve for bucket cylinder	+
Lubrication hoses protection on stick	+
Mono boom 6.20 m	+
Mono boom straight 6.50 m	+
Pipe fracture safety valve for stick cylinder	+
Pipe fracture safety valves for boom cylinders	+
Quick coupler SWA 48 hydraulic	+
Quick coupler SWA 48 mechanical	+
Quick coupler SWA 66 hydraulic	+
Quick coupler SWA 66 mechanical	+
Special painting	+
Stick 2.50 m	+
Stick 2.80 m	+
Stick 3.20 m	+
Stick 3.70 m	+
Stick bottom protection	+
Tool Management	+
Two-piece boom 6.40 m	+

• = Standard, + = Option
[1)] Equipment not individually available, but only as predefined lighting packages
Non-exhaustive list, please contact us for further information.

Options and / or special equipments, supplied by vendors other than Liebherr, are only to be installed with the knowledge and approval of Liebherr in order to retain warranty.

Notes

The Liebherr Group of Companies

Wide Product Range
The Liebherr Group is one of the largest construction equipment manufacturers in the world. Liebherr's high-value products and services enjoy a high reputation in many other fields. The wide range includes domestic appliances, aerospace and transportation systems, machine tools and maritime cranes.

Exceptional Customer Benefit
Every product line provides a complete range of models in many different versions. With both their technical excellence and acknowledged quality, Liebherr products offer a maximum of customer benefits in practical applications.

State-of-the-art Technology
To provide consistent, top quality products, Liebherr attaches great importance to each product area, its components and core technologies. Important modules and components are developed and manufactured in-house, for instance the entire drive and control technology for construction equipment.

Worldwide and Independent
Hans Liebherr founded the Liebherr family company in 1949. Since then, the family business has steadily grown to a group of more than 130 companies with more than 48,000 employees located on all continents. The corporate headquarters of the Group is Liebherr-International AG in Bulle, Switzerland. The Liebherr family is the sole owner of the company.

www.liebherr.com

RG-BK LFR/SP-12247294-web-10.19_enGB
All illustrations and data may differ from standard equipment. Subject to change without notice. All indicated loads are based in accordance with ISO 9248.

Liebherr-France SAS
2 avenue Joseph Rey, B.P. 90287, FR-68005 Colmar Cedex
☎ +33 389 21 30 30, Fax +33 389 21 37 93
www.liebherr.com, E-Mail: info.lfr@liebherr.com
www.facebook.com/LiebherrConstruction